SITE USE PLAN SUBMISSION

140 TIHONET ROAD, WAREHAM, MA 02571

SOLAR PHOTOVOLTAIC AND ENERGY STORAGE ELECTRIC SYSTEM

GENERAL NOTES

1. AS CONTAINED HEREIN, "CONTRACTOR" IS ASSUMED TO BE THE EPC PROVIDER HIRED BY THE SYSTEM/PROJECT OWNER.THESE NOTES SET MINIMUM STANDARDS FOR CONSTRUCTION. THE DRAWINGS GOVERN OVER THESE NOTES TO THE EXTENT SHOWN.
2. WHEN THERE IS A CONFLICT BETWEEN THESE GENERAL NOTES AND THE DRAWINGS, THE DRAWINGS SHALL GOVERN.EXCEPTIONS TO THE CONTRACT DOCUMENTS ARE PERMITTED ONLY WITH THE APPROVAL OF BORREGO.
3. ALL WORK SHALL CONFORM TO THE MINIMUM STANDARDS OF THE FOLLOWING: LOCAL BUILDING CODE, LOCAL ELECTRICAL CODE, ANY OTHER REGULATING AGENCIES WHICH HAVE AUTHORITY OVER ANY PORTION OF THE WORK AND THOSE CODES AND STANDARDS LISTED IN THESE DRAWINGS.
4. THESE DRAWINGS SHALL NOT BE USED FOR CONSTRUCTION. THE CONTRACTOR SHALL BE RESPONSIBLE FOR DEVELOPING A CONSTRUCTION LEVEL DESIGN AND ASSOCIATED DRAWINGS AND DETAILS.
5. COORDINATE THESE DRAWINGS WITH SPECIFICATIONS AND MANUFACTURER INSTALLATION AND OPERATION MANUALS.
6. UNLESS OTHERWISE NOTED, THE DESIGN REPRESENTED ON THESE PLANS IS BASED ON THE INFORMATION AND CRITERIA LISTED IN THE "BASIS OF DESIGN" SECTION. IT IS THE RESPONSIBILITY OF THE CONTRACTOR TO VERIFY SUCH INFORMATION IN PREPARATION OF THE CONSTRUCTION DESIGN.
7. THE EXISTING CONDITIONS REPRESENTED ON THESE PLANS ARE BASED ON PUBLICLY AVAILABLE INFORMATION AND THE SITE DISCOVERY SUMMARIZED IN THESE DRAWINGS. IT IS THE RESPONSIBILITY OF THE CONTRACTOR TO VERIFY THE ACCURACY OF SUCH INFORMATION AND SUPPLEMENT WITH ANY ADDITIONAL REQUIRED INFORMATION.
8. UNLESS INDICATED AS EXISTING (E), ALL PROPOSED MATERIALS AND EQUIPMENT SHALL BE CONSIDERED TO BE NEW.
9. ALL EQUIPMENT AND COMPONENTS SHALL BE MOUNTED IN COMPLIANCE WITH THE MANUFACTURER'S REQUIREMENTS, CONSTRUCTION DETAILS, AND/OR PRUDENT INDUSTRY STANDARDS.
10. TO THE EXTENT THAT TRESS AND OTHER FEATURES AFFECT THE SYSTEM'S PRODUCTION, SUCH PRODUCTION MODELING IS BASED ON THE EXISTING APPROXIMATE HEIGHTS AND LOCATIONS RELATIVE TO THE SYSTEM AND MAY BE IMPACTED AS TREES GROW AND OTHER FEATURES CHANGE.

PROJECT SCOPE

THIS PROJECT CONSISTS OF THE INSTALLATION OF SOLAR MODULES PER THE SYSTEM DESCRIPTION, BELOW. THE MODULES WILL BE INSTALLED ON A GROUND MOUNTED RACKING SYSTEM. THE MODULES WILL BE WIRED IN SERIES STRINGS AND CONNECTED IN PARALLEL TO THE INVERTERS, WHICH CONVERT THE PHOTOVOLTAIC OUTPUT POWER FROM DC TO AC. THE SOLAR ELECTRIC SYSTEM WILL BE INTERCONNECTED WITH THE EXISTING SITE ELECTRICAL SYSTEM IN ACCORDANCE WITH THE APPLICABLE ELECTRIC CODE AND EVERSOURCE REQUIREMENTS.

THIS PROJECT CONSISTS OF THE INSTALLATION OF ENERGY STORAGE EQUIPMENT, PER THE SYSTEM DESCRIPTION, BELOW. THE ENERGY STORAGE MODULES WILL BE INSTALLED IN A PURPOSE BUILT UNIT(S), AND FIRE SUPPRESSION SYSTEMS. THE ENERGY STORAGE MODULES WILL BE WIRED IN SERIES STRINGS AND CONNECTED THROUGH DC/DC CONVERTERS, WHICH WILL CONVERT DC TO AC WHILE THE BATTERIES ARE DISCHARGING

PV SYSTEM DESCRIPTION

APPROXIMATE SYSTEM SIZE (DC)	19,300.275 KW	SYSTEM SIZE (AC)	4,995 KW
MODULES	(47,655) LG405N2T-J5	INVERTER(S)	(5) POWER ELECTRONICS HEMK FS2125 POWER LIMITED TO 999kW
STC RATING	405	CEC EFFICIENCY	98.8%
RACKING	TERRASMART TGP	AZIMUTH	180° (SOUTH = 180°)
TILT ANGLE	25°		

ENERGY STORAGE SYSTEM DESCRIPTION

SYSTEM POWER CAPACITY	4995kW
USABLE ENERGY CAPACITY	6 HOURS AT RATED POWER CAPACITY
POWER CONVERSION SYSTEM	SAME AS ABOVE
DC/DC CONVERTER	POWER ELECTRONICS FREEMAQ FD0500 DC/DC CONVERTER 500kW

TOTAL SYSTEM DESCRIPTION

TOTAL PV+STORAGE POWER CAPACITY	4,995kWAC
MAXIMUM EXPORT TO UTILITY	4,995kWAC
STORAGE CHARGING MODE	SOLAR ONLY

LOCATION MAP

AERIAL VIEW

DRAWING LIST

SHEET NUMBER	SHEET TITLE
T-1	TITLE PAGE
CIVIL	
C-1.0	EXISTING CONDITIONS PLAN
C-2.0	TREE CLEARING PLAN
C-3.0	OVERALL LAYOUT AND MATERIALS PLAN
C-3.1	LAYOUT AND MATERIALS – NORTH
C-3.2	LAYOUT AND MATERIALS – SOUTH
C-4.0	OVERALL GRADING AND EROSION CONTROL PLAN
C-4.1	GRADING AND EROSION CONTROL PLAN – NORTH
C-4.2	GRADING AND EROSION CONTROL PLAN – SOUTH
C-4.3	GRADING AND EROSION CONTROL PLAN – BASIN 7, 1, 2
C-4.4	GRADING AND EROSION CONTROL PLAN – BASIN 3, 4, 5, 6
C-4.5	GRADING AND EROSION CONTROL PLAN – ENTRANCES
C-5.0	CIVIL DETAILS
C-5.1	CIVIL DETAILS
ELECTRICAL	
E-1.0	ELECTRICAL SITE PLAN

APPLICABLE CODES AND STANDARDS

2020 MASSACHUSETTS ELECTRICAL CODE 527 CMR12.00
MASSACHUSETTS BUILDING CODE 9TH EDITION
UL-1703 – SOLAR MODULES
UL-1741 – INVERTERS, COMBINER BOXES
UL-2703 – RACKING MOUNTING SYSTEMS AND CLAMPING DEVICES FOR PV MODULES
UL-1642 – STANDARD FOR LITHIUM BATTERIES
UL-1973 – STANDARD FOR BATTERIES FOR USE IN LIGHT ELECTRIC RAIL (LER) APPLICATIONS AND STATIONARY APPLICATIONS
UL-9540 – STANDARD FOR ENERGY STORAGE SYSTEMS AND EQUIPMENT

PROJECT DIRECTORY

SYSTEM / PROJECT OWNER
TBD

LAND OWNER / HOST
A.D. MAKEPEACE COMPANY
158 TIHONET ROAD
WAREHAM, MA 02571

AUTHORITY HAVING JURISDICTION
TOWN OF WAREHAM
54 MARION ROAD
WAREHAM, MA 02571

UTILITY
EVERSOURCE

CIVIL ENGINEER
BEALS AND THOMAS, INC.
32 COURT STREET
PLYMOUTH, MA 02360

CIVIL ENGINEER
FIRM: BEALS AND THOMAS, INC.
CONTACT: JEFFREY R. MURPHY, P.E.
PHONE: (508)-366-0560

FIRM: BORREGO SOLAR SYSTEMS, INC.
CONTACT: DEAN SMITH, P.E.
PHONE: (978)-221-3103

ELECTRICAL ENGINEER
FIRM: BORREGO SOLAR SYSTEMS, INC.
CONTACT: AHARON WRIGHT, P.E.
PHONE: (978)-726-3496

DESIGN ENGINEER
FIRM: BORREGO SOLAR SYSTEMS, INC.
CONTACT: NORMAN HALLISSEY
PHONE: (978)-207-3926

GENERAL ABBREVIATIONS

(E)	EXISTING	NS	NORTH-SOUTH
AHJ	AUTHORITY HAVING JURISDICTION	NTS	NOT TO SCALE
AL	ALUMINUM	OAE	OR APPROVED EQUAL
APPROX	APPROXIMATE	OC	ON CENTER
ARY	ARRAY	OD	OUTSIDE DIAMETER
BLDG	BUILDING	OFCI	OWNER FURNISHED CONTRACTOR INSTALLED
BSS	BORREGO SOLAR SYSTEM		
CL	CENTERLINE	PV	PHOTOVOLTAIC
DAS	DATA ACQUISITION SYSTEM	PVC	POLY VINYL CHLORIDE
DIA	DIAMETER	SCH	SCHEDULE
DO	DITTO	SS	STAINLESS STEEL
EW	EAST-WEST	SSS	SOLAR SUPPORT STRUCTURE
FBO	FURNISHED BY OTHERS	STC	STANDARD TEST CONDITIONS
FF	FORWARD FACING	TBD	TO BE DETERMINED
GALV	GALVANIZED	TP	TAMPER PROOF
HDG	HOT DIP GALVANIZED	TYP	TYPICAL
HVAC	HEATING VENTILATION AND AIR CONDITIONING	UON	UNLESS OTHERWISE NOTED
		VIF	VERIFY IN FIELD
ID	INSIDE DIAMETER	WP	WEATHER PROOF
MFR	MANUFACTURER		
MOD	SOLAR MODULE		

REV 1.0

THIS DOCUMENT IS PROVIDED BY BORREGO SOLAR SYSTEMS, INC. TO FACILITATE THE SALE AND INSTALLATION OF A SOLAR POWER SYSTEM FROM BORREGO SOLAR SYSTEMS, INC. REPRODUCTION, RELEASE OR UTILIZATION FOR ANY OTHER PURPOSE, WITHOUT PRIOR WRITTEN CONSENT IS STRICTLY PROHIBITED.

BORREGO SOLAR
55 TECHNOLOGY DRIVE, SUITE 102
LOWELL, MA 01851
PHONE: (888) 898-6273
FAX: (888) 843-6778
WWW.BORREGOSOLAR.COM

NOT FOR CONSTRUCTION

COMMONWEALTH OF MASSACHUSETTS
JEFFREY R. MURPHY
CIVIL
No. 51800
REGISTERED PROFESSIONAL ENGINEER
1/19/2021

SITE USE PLAN
140 TIHONET ROAD
WAREHAM, MA 02571

PROJECT NUMBER:
905-2708

REV	DATE	DRAWN	CHECKED	RELEASE LEVEL
	03/26/20	WS	CDS	SUP SET CREATION
	05/07/20	WS	CDS	REVISIONS PER NEW FIELD DATA
	06/01/20	LBD	CDS	UPDATED SET TO MATCH DESIGN CHANGES
	06/02/20	WS	CDS	ISSUED FOR LOCAL PERMITTING
	08/19/20	WS	CDS	CREATE SIGHT LINE EXHIBIT
	01/19/21	WS	JM	RESUBMISSION TO LOCAL AHJ

SCALES STATED ON DRAWINGS ARE VALID ONLY WHEN PLOTTED ARCH D 24" X 36"

T-1
TITLE PAGE

NOTES:

1. ALL FLAGS BEGINNING WITH "BF" ARE BANK FLAGS. ALL OTHERS ARE WETLAND FLAGS
2. THIS PLAN IS PREPARED BASED ON THE LIMITED ALTA/NSPS LAND TITLE SURVEY PREPARED BY NORTHEAST SURVEY CONSULTANTS AND STAMPED MARCH 5, 2020. WITH FIELD WORK COMPLETED ON MARCH 4, 2020.
3. SOME SUPPLEMENTAL INFORMATION HAS BEEN ADDED TO THE PLAN.
4. WETLAND RESOURCE AREAS WERE DELINEATED BY BEALS AND THOMAS, INC. ON APRIL 10 2020, APRIL 14, 2020 AND APRIL 17, 2020, WITH INVESTIGATIONS OF POTENTIAL VERNAL POOLS OCCURRING ON APRIL 17, 2020 AND MAY 11, 2020.

EXISTING CONDITIONS PLAN

SCALE: 1" = 200'

0 200' 400'

THIS DOCUMENT IS PROVIDED BY BORREGO SOLAR SYSTEMS, INC. TO FACILITATE THE SALE AND INSTALLATION OF A SOLAR POWER SYSTEM FROM BORREGO SOLAR SYSTEMS, INC. REPRODUCTION, RELEASE OR UTILIZATION FOR ANY OTHER PURPOSE, WITHOUT PRIOR WRITTEN CONSENT IS STRICTLY PROHIBITED.

BORREGO SOLAR

55 TECHNOLOGY DRIVE, SUITE 102
LOWELL, MA 01851
PHONE: (888) 898-6273
FAX: (888) 843-6778
WWW.BORREGOSOLAR.COM

NOT FOR CONSTRUCTION

COMMONWEALTH OF MASSACHUSETTS
CHARLES D. SMITH
CIVIL
No. 52136
REGISTERED PROFESSIONAL ENGINEER

Charles D. Smith
1/19/21

SITE USE PLAN
140 THIONET ROAD
WAREHAM, MA 02571

PROJECT NUMBER: 905-2708

REV	DATE	DRAWN	CHECKED	RELEASE LEVEL
	03/26/20	WS	CDS	SUP SET CREATION
	05/07/20	WS	CDS	REVISIONS PER NEW FIELD DATA
	06/01/20	LBD	CDS	UPDATED SET TO MATCH DESIGN CHANGES
	06/02/20	WS	CDS	ISSUED FOR LOCAL PERMITTING
	08/19/20	WS	CDS	CREATE SIGHT LINE EXHIBIT
	01/19/21	WS	JM	RESUBMISSION TO LOCAL AHJ

SCALES STATED ON DRAWINGS ARE VALID ONLY WHEN PLOTTED ARCH D 24" X 36"

C-1.0

EXISTING CONDITIONS PLAN

NOTE:
1. ALL FLAGS BEGINNING WITH "BF" ARE BANK FLAGS. ALL OTHERS ARE WETLAND FLAGS.
2. NO WORK SHALL OCCUR WITHIN THE LOCAL POTENTIAL VERNAL POOL RESOURCE AREA.
3. LOAM AND SEED AREAS WITHIN THE LIMIT OF WORK AND OUTSIDE OF ACCESS ROADS AND EQUIPMENT PADS.

TREE CUTTING AND STUMPING= 65.34 ACRES

TOTAL= 65.34 ACRES

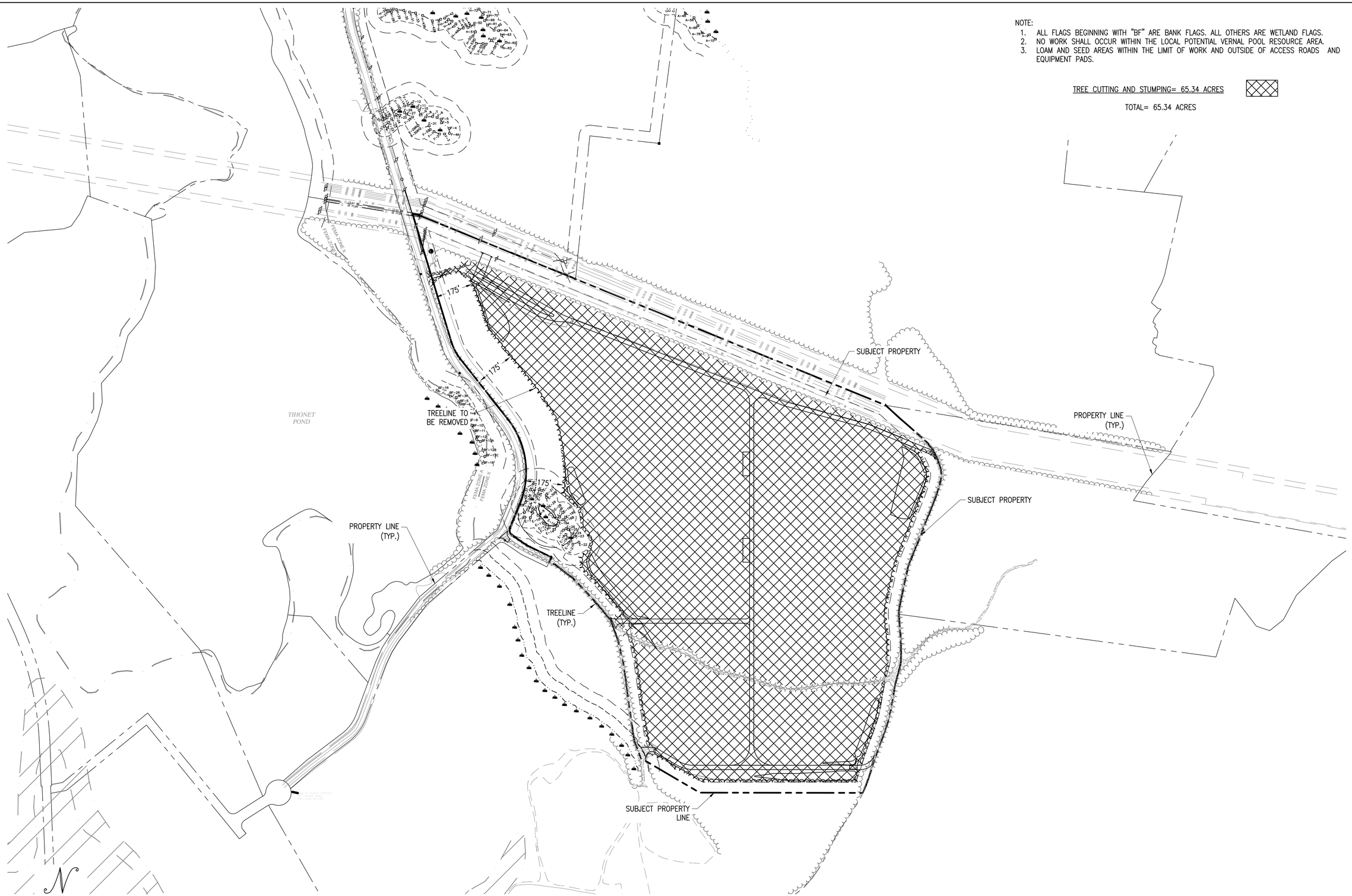

TREE CLEARING PLAN

SCALE: 1" = 200'

0 200' 400'

THIS DOCUMENT IS PROVIDED BY BORREGO SOLAR SYSTEMS, INC. TO FACILITATE THE SALE AND INSTALLATION OF A SOLAR POWER SYSTEM FROM BORREGO SOLAR SYSTEMS, INC. REPRODUCTION, RELEASE OR UTILIZATION FOR ANY OTHER PURPOSE, WITHOUT PRIOR WRITTEN CONSENT IS STRICTLY PROHIBITED.

BORREGO SOLAR
55 TECHNOLOGY DRIVE, SUITE 102
LOWELL, MA 01851
PHONE: (888) 898-6273
FAX: (888) 843-6778
WWW.BORREGOSOLAR.COM

NOT FOR CONSTRUCTION

COMMONWEALTH OF MASSACHUSETTS
JEFFREY R. MURPHY
CIVIL
No. 51800
REGISTERED PROFESSIONAL ENGINEER
1/19/2021

SITE USE PLAN
140 TIHONET ROAD
WAREHAM, MA 02571

PROJECT NUMBER: 905-2708

REV	DATE	DRAWN	CHECKED	RELEASE LEVEL
	03/26/20	WS	CDS	SUP SET CREATION
	05/07/20	WS	CDS	REVISIONS PER NEW FIELD DATA
	06/01/20	LBD	CDS	UPDATED SET TO MATCH DESIGN CHANGES
	06/02/20	WS	CDS	ISSUED FOR LOCAL PERMITTING
	08/19/20	WS	CDS	CREATE SIGHT LINE EXHIBIT
	01/19/21	WS	JM	RESUBMISSION TO LOCAL AHJ

SCALES STATED ON DRAWINGS ARE VALID ONLY WHEN PLOTTED ARCH D 24" X 36"

C-2.0
TREE CLEARING PLAN

OVERALL LAYOUT AND MATERIALS PLAN

SCALE: 1" = 200'

0 200' 400'

THIS DOCUMENT IS PROVIDED BY BORREGO SOLAR SYSTEMS, INC. TO FACILITATE THE SALE AND INSTALLATION OF A SOLAR POWER SYSTEM FROM BORREGO SOLAR SYSTEMS, INC. REPRODUCTION, RELEASE OR UTILIZATION FOR ANY OTHER PURPOSE, WITHOUT PRIOR WRITTEN CONSENT IS STRICTLY PROHIBITED.

BORREGO SOLAR
55 TECHNOLOGY DRIVE, SUITE 102
LOWELL, MA 01851
PHONE: (888) 898-6273
FAX: (888) 843-6778
WWW.BORREGOSOLAR.COM

NOT FOR CONSTRUCTION

COMMONWEALTH OF MASSACHUSETTS
JEFFREY R. MURPHY
CIVIL
No. 51800
REGISTERED PROFESSIONAL ENGINEER
1/19/2021

SITE USE PLAN
140 TIHONET ROAD
WAREHAM, MA 02571

PROJECT NUMBER:
905-2708

REV	DATE	DRAWN	CHECKED	RELEASE LEVEL
	03/26/20	WS	CDS	SUP SET CREATION
	05/07/20	WS	CDS	REVISIONS PER NEW FIELD DATA
	06/01/20	LBD	CDS	UPDATED SET TO MATCH DESIGN CHANGES
	06/02/20	WS	CDS	ISSUED FOR LOCAL PERMITTING
	08/19/20	WS	CDS	CREATE SIGHT LINE EXHIBIT
	01/19/21	WS	JM	RESUBMISSION TO LOCAL AHJ

SCALES STATED ON DRAWINGS ARE VALID ONLY WHEN PLOTTED ARCH D 24" X 36"

C-3.0

OVERALL LAYOUT AND MATERIALS PLAN

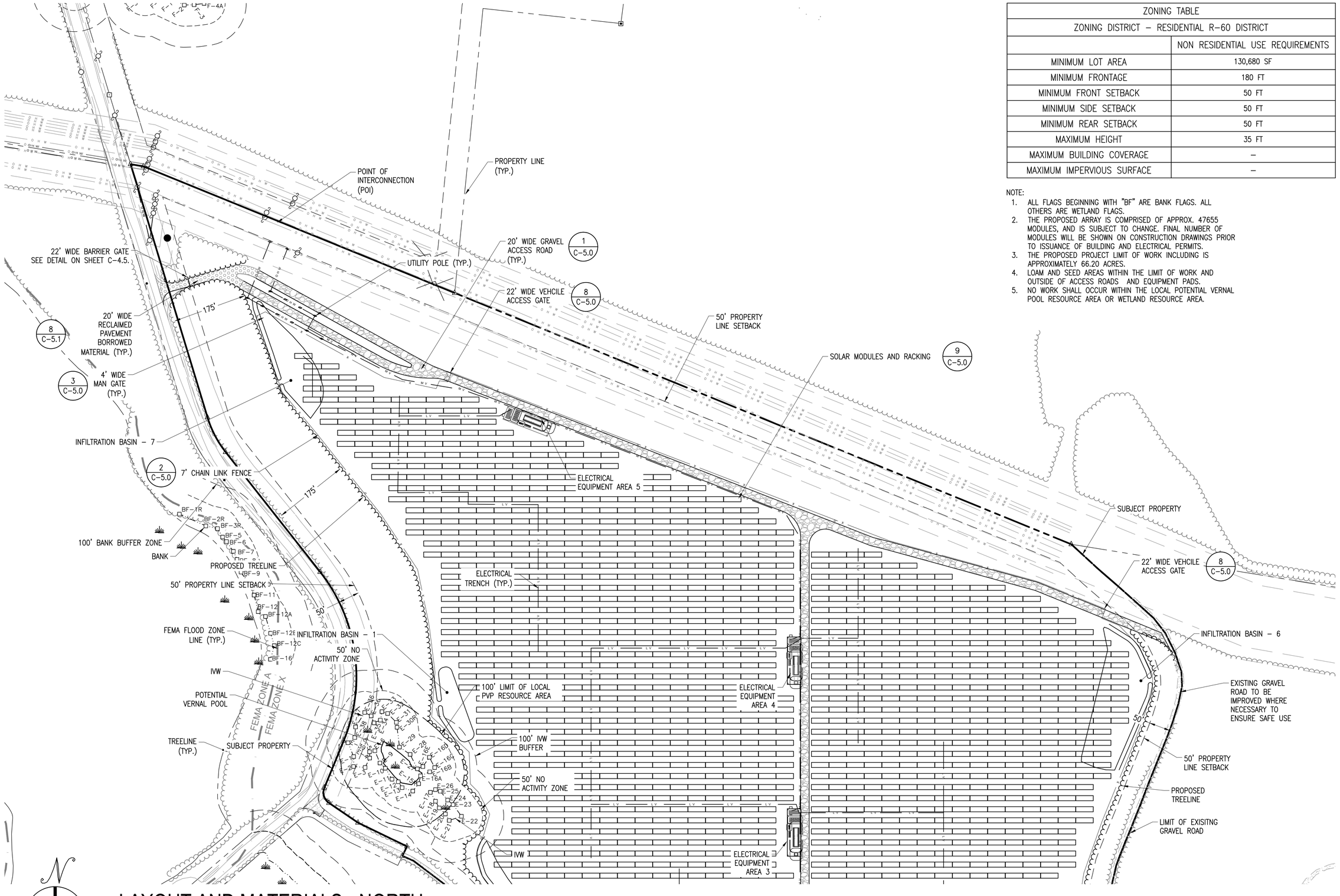

LAYOUT AND MATERIALS - NORTH

SCALE: 1" = 100'

0 100' 200'

ZONING TABLE	
ZONING DISTRICT – RESIDENTIAL R-60 DISTRICT	
	NON RESIDENTIAL USE REQUIREMENTS
MINIMUM LOT AREA	130,680 SF
MINIMUM FRONTAGE	180 FT
MINIMUM FRONT SETBACK	50 FT
MINIMUM SIDE SETBACK	50 FT
MINIMUM REAR SETBACK	50 FT
MAXIMUM HEIGHT	35 FT
MAXIMUM BUILDING COVERAGE	–
MAXIMUM IMPERVIOUS SURFACE	–

NOTE:

1. ALL FLAGS BEGINNING WITH "BF" ARE BANK FLAGS. ALL OTHERS ARE WETLAND FLAGS.
2. THE PROPOSED ARRAY IS COMPRISED OF APPROX. 47655 MODULES, AND IS SUBJECT TO CHANGE. FINAL NUMBER OF MODULES WILL BE SHOWN ON CONSTRUCTION DRAWINGS PRIOR TO ISSUANCE OF BUILDING AND ELECTRICAL PERMITS.
3. THE PROPOSED PROJECT LIMIT OF WORK INCLUDING IS APPROXIMATELY 66.20 ACRES.
4. LOAM AND SEED AREAS WITHIN THE LIMIT OF WORK AND OUTSIDE OF ACCESS ROADS AND EQUIPMENT PADS.
5. NO WORK SHALL OCCUR WITHIN THE LOCAL POTENTIAL VERNAL POOL RESOURCE AREA OR WETLAND RESOURCE AREA.

THIS DOCUMENT IS PROVIDED BY BORREGO SOLAR SYSTEMS, INC. TO FACILITATE THE SALE AND INSTALLATION OF A SOLAR POWER SYSTEM FROM BORREGO SOLAR SYSTEMS, INC. REPRODUCTION, RELEASE OR UTILIZATION FOR ANY OTHER PURPOSE, WITHOUT PRIOR WRITTEN CONSENT IS STRICTLY PROHIBITED.

BORREGO SOLAR
55 TECHNOLOGY DRIVE, SUITE 102
LOWELL, MA 01851
PHONE: (888) 898-6273
FAX: (888) 843-6778
WWW.BORREGOSOLAR.COM

NOT FOR CONSTRUCTION

COMMONWEALTH OF MASSACHUSETTS
JEFFREY R. MURPHY
CIVIL
No. 51800
REGISTERED PROFESSIONAL ENGINEER
1/19/2021

SITE USE PLAN
140 THONET ROAD
WAREHAM, MA 02571

PROJECT NUMBER: 905-2708

REV	DATE	DRAWN	CHECKED	RELEASE LEVEL
	03/26/20	WS	CDS	SUP SET CREATION
	05/07/20	WS	CDS	REVISIONS PER NEW FIELD DATA
	06/01/20	LBD	CDS	UPDATED SET TO MATCH DESIGN CHANGES
	06/02/20	WS	CDS	ISSUED FOR LOCAL PERMITTING
	08/19/20	WS	CDS	CREATE SIGHT LINE EXHIBIT
	01/19/21	WS	JM	RESUBMISSION TO LOCAL AHJ

SCALES STATED ON DRAWINGS ARE VALID ONLY WHEN PLOTTED ARCH D 24" X 36"

C-3.1
LAYOUT AND MATERIALS - NORTH

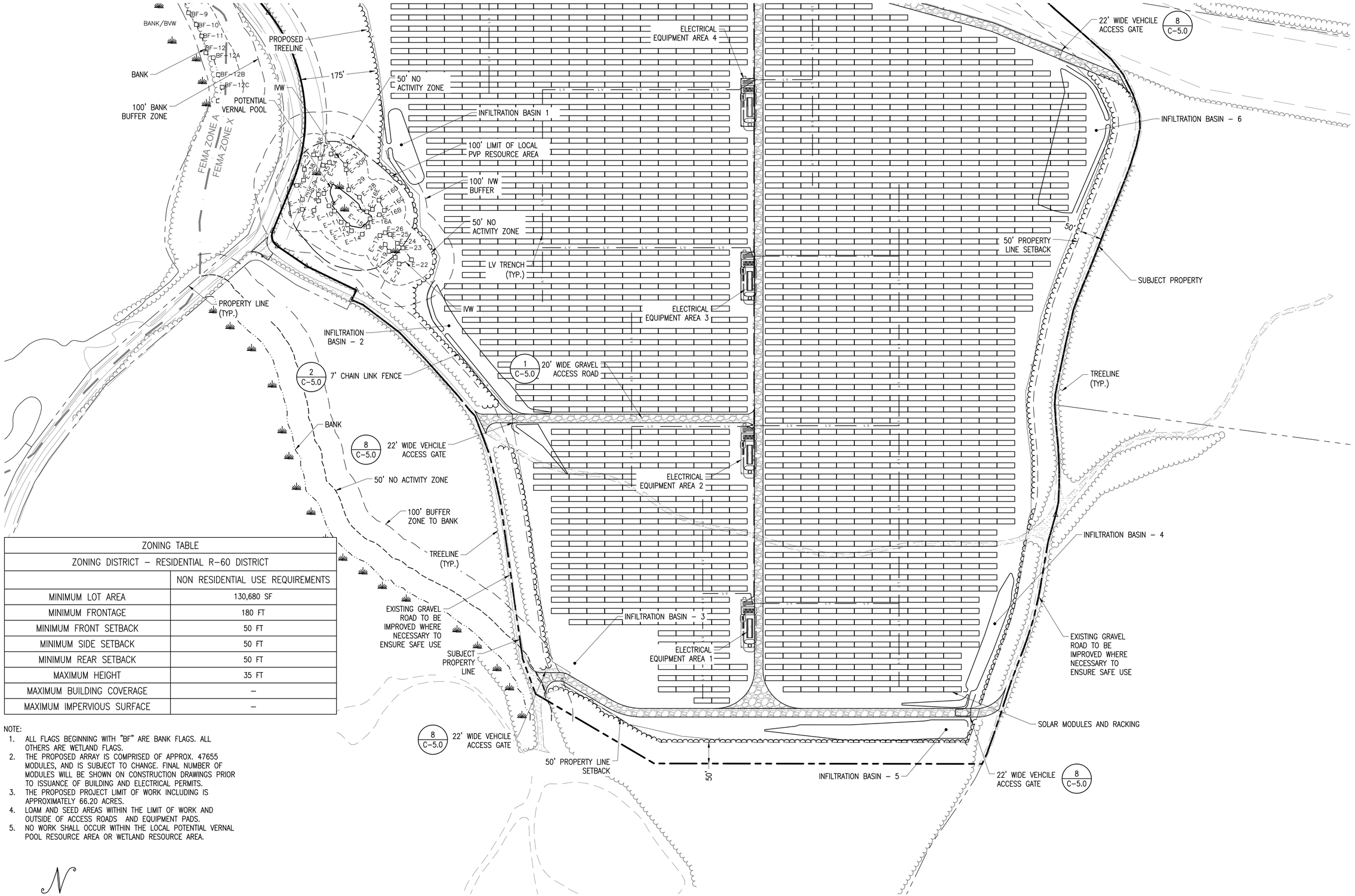

ZONING TABLE	
ZONING DISTRICT – RESIDENTIAL R-60 DISTRICT	
	NON RESIDENTIAL USE REQUIREMENTS
MINIMUM LOT AREA	130,680 SF
MINIMUM FRONTAGE	180 FT
MINIMUM FRONT SETBACK	50 FT
MINIMUM SIDE SETBACK	50 FT
MINIMUM REAR SETBACK	50 FT
MAXIMUM HEIGHT	35 FT
MAXIMUM BUILDING COVERAGE	–
MAXIMUM IMPERVIOUS SURFACE	–

NOTE:

1. ALL FLAGS BEGINNING WITH "BF" ARE BANK FLAGS. ALL OTHERS ARE WETLAND FLAGS.
2. THE PROPOSED ARRAY IS COMPRISED OF APPROX. 47655 MODULES, AND IS SUBJECT TO CHANGE. FINAL NUMBER OF MODULES WILL BE SHOWN ON CONSTRUCTION DRAWINGS PRIOR TO ISSUANCE OF BUILDING AND ELECTRICAL PERMITS.
3. THE PROPOSED PROJECT LIMIT OF WORK INCLUDING IS APPROXIMATELY 66.20 ACRES.
4. LOAM AND SEED AREAS WITHIN THE LIMIT OF WORK AND OUTSIDE OF ACCESS ROADS AND EQUIPMENT PADS.
5. NO WORK SHALL OCCUR WITHIN THE LOCAL POTENTIAL VERNAL POOL RESOURCE AREA OR WETLAND RESOURCE AREA.

LAYOUT AND MATERIALS - SOUTH

SCALE: 1" = 100'

0 100' 200'

THIS DOCUMENT IS PROVIDED BY BORREGO SOLAR SYSTEMS, INC. TO FACILITATE THE SALE AND INSTALLATION OF A SOLAR POWER SYSTEM FROM BORREGO SOLAR SYSTEMS, INC. REPRODUCTION, RELEASE OR UTILIZATION FOR ANY OTHER PURPOSE, WITHOUT PRIOR WRITTEN CONSENT IS STRICTLY PROHIBITED.

BORREGO SOLAR
55 TECHNOLOGY DRIVE, SUITE 102
LOWELL, MA 01851
PHONE: (888) 898-6273
FAX: (888) 843-6778
WWW.BORREGOSOLAR.COM

NOT FOR CONSTRUCTION

COMMONWEALTH OF MASSACHUSETTS
JEFFREY R. MURPHY
CIVIL
No. 51800
REGISTERED PROFESSIONAL ENGINEER
1/19/2021

SITE USE PLAN
140 THONET ROAD
WAREHAM, MA 02571

PROJECT NUMBER: 905-2708

REV	DATE	DRAWN	CHECKED	RELEASE LEVEL
	03/26/20	WS	CDS	SUP SET CREATION
	05/07/20	WS	CDS	REVISIONS PER NEW FIELD DATA
	06/01/20	LBD	CDS	UPDATED SET TO MATCH DESIGN CHANGES
	06/02/20	WS	CDS	ISSUED FOR LOCAL PERMITTING
	08/19/20	WS	CDS	CREATE SIGHT LINE EXHIBIT
	01/19/21	WS	JM	RESUBMISSION TO LOCAL AHJ

SCALES STATED ON DRAWINGS ARE VALID ONLY WHEN PLOTTED ARCH D 24" X 36"

C-3.2
LAYOUT AND MATERIALS - SOUTH

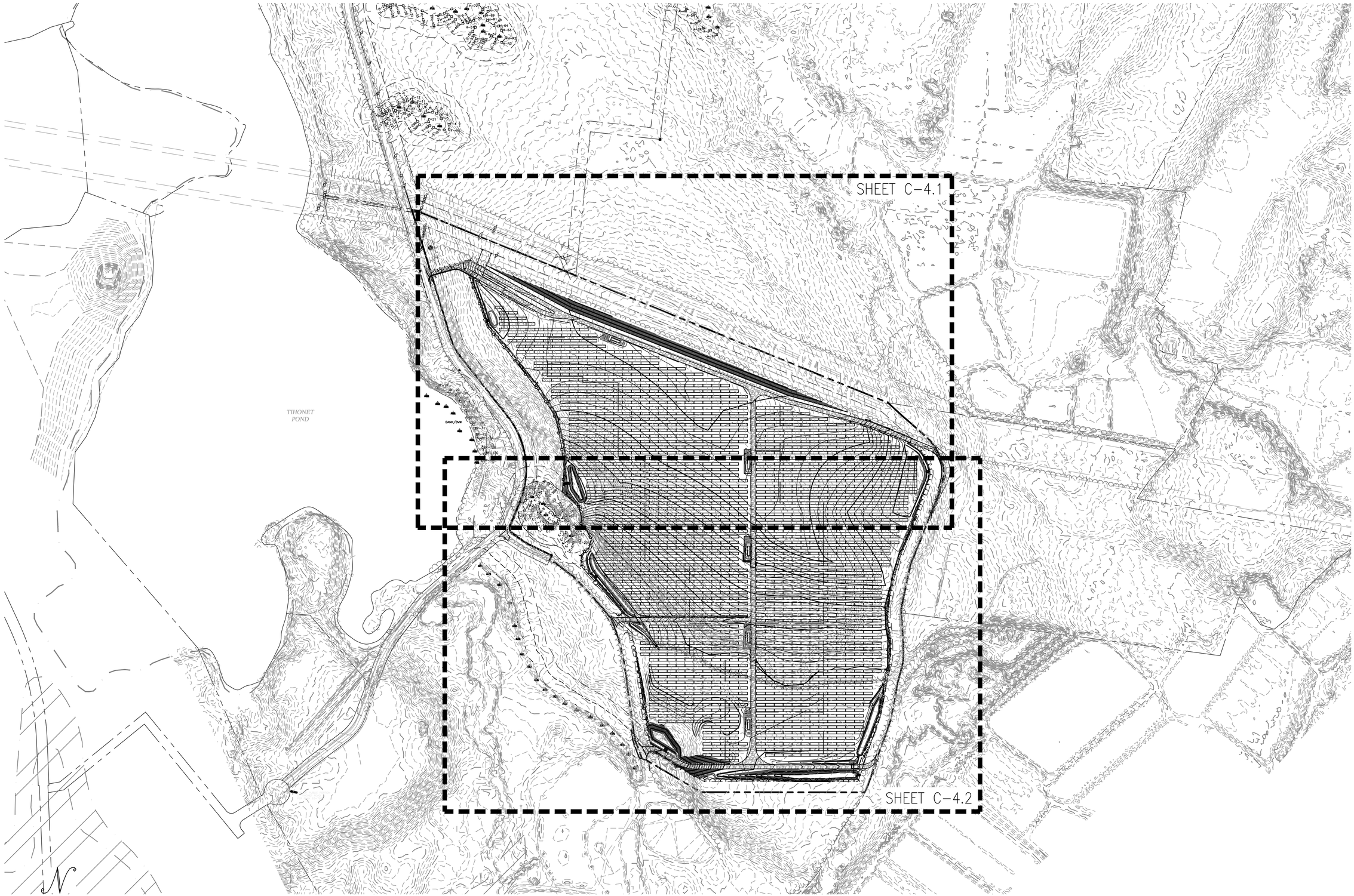

OVERALL GRADING AND EROSION CONTROL PLAN

SCALE: 1" = 200'

0 200' 400'

THIS DOCUMENT IS PROVIDED BY BORREGO SOLAR SYSTEMS, INC. TO FACILITATE THE SALE AND INSTALLATION OF A SOLAR POWER SYSTEM FROM BORREGO SOLAR SYSTEMS, INC. REPRODUCTION, RELEASE OR UTILIZATION FOR ANY OTHER PURPOSE, WITHOUT PRIOR WRITTEN CONSENT IS STRICTLY PROHIBITED.

BORREGO SOLAR
55 TECHNOLOGY DRIVE, SUITE 102
LOWELL, MA 01851
PHONE: (888) 898-6273
FAX: (888) 843-6778
WWW.BORREGOSOLAR.COM

NOT FOR CONSTRUCTION

COMMONWEALTH OF MASSACHUSETTS
JEFFREY P. MURPHY
CIVIL
No. 51800
REGISTERED PROFESSIONAL ENGINEER
Jeffrey P. Murphy
1/19/2021

SITE USE PLAN
140 TIHONET ROAD
WAREHAM, MA 02571

PROJECT NUMBER:
905-2708

REV	DATE	DRAWN	CHECKED	RELEASE LEVEL
	03/26/20	WS	CDS	SUP SET CREATION
	05/07/20	WS	CDS	REVISIONS PER NEW FIELD DATA
	06/01/20	LBD	CDS	UPDATED SET TO MATCH DESIGN CHANGES
	06/02/20	WS	CDS	ISSUED FOR LOCAL PERMITTING
	08/19/20	WS	CDS	CREATE SIGHT LINE EXHIBIT
	01/19/21	WS	JM	RESUBMISSION TO LOCAL AHJ

SCALES STATED ON DRAWINGS ARE VALID ONLY WHEN PLOTTED ARCH D 24" X 36"

C-4.0
OVERALL GRADING AND EROSION CONTROL PLAN

NOTE:

1. ALL FLAGS BEGINNING WITH "BF" ARE BANK FLAGS. ALL OTHERS ARE WETLAND FLAGS.
2. THE PROPOSED ARRAY IS COMPRISED OF APPROX. 47655 MODULES, AND IS SUBJECT TO CHANGE. FINAL NUMBER OF MODULES WILL BE SHOWN ON CONSTRUCTION DRAWINGS PRIOR TO ISSUANCE OF BUILDING AND ELECTRICAL PERMITS.
3. THE PROPOSED PROJECT LIMIT OF WORK INCLUDING IS APPROXIMATELY 66.20 ACRES.
4. LOAM AND SEED AREAS WITHIN THE LIMIT OF WORK AND OUTSIDE OF ACCESS ROADS AND EQUIPMENT PADS.
5. NO WORK SHALL OCCUR WITHIN THE LOCAL POTENTIAL VERNAL POOL RESOURCE AREA OR WETLAND RESOURCE AREA.

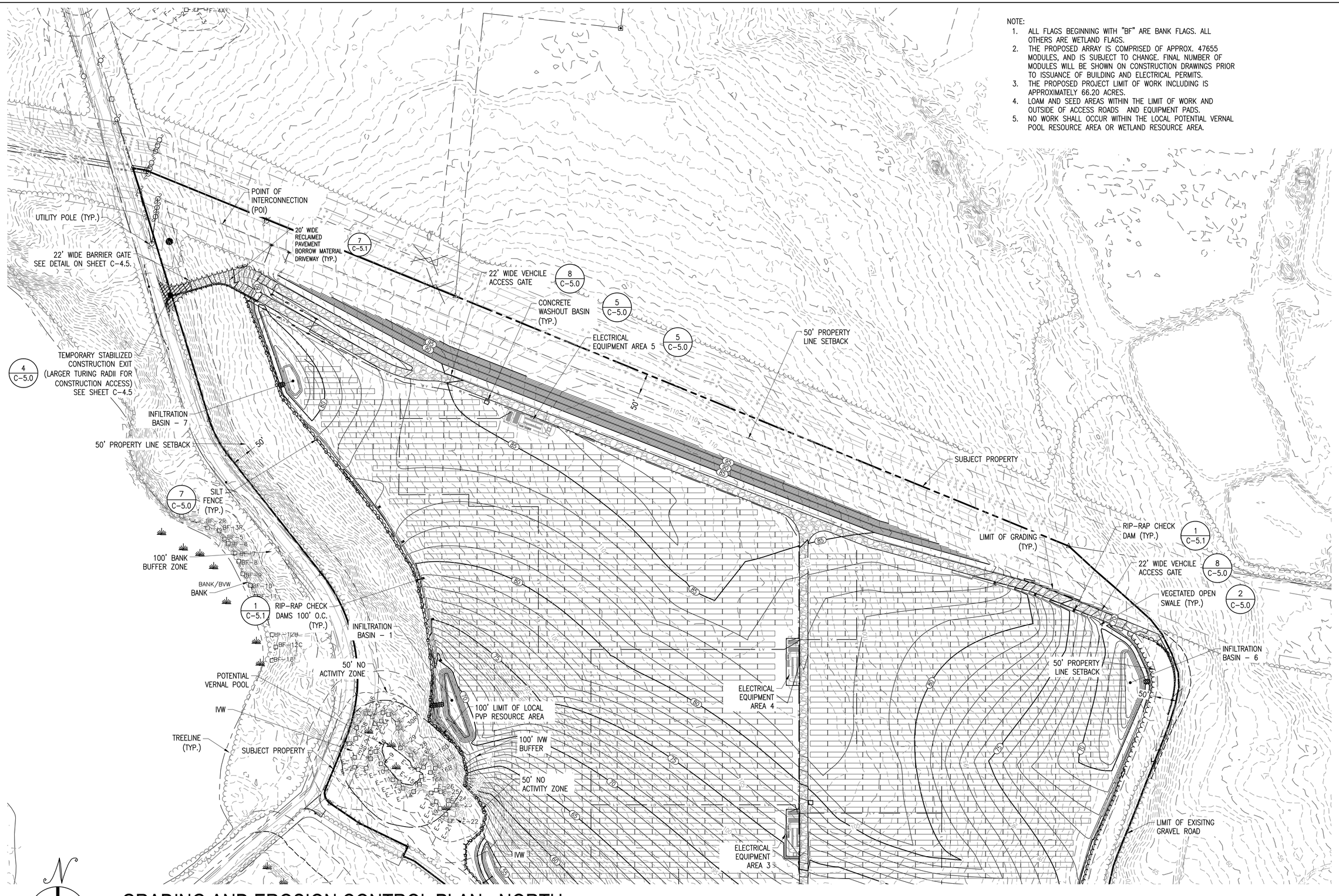

GRADING AND EROSION CONTROL PLAN - NORTH

SCALE: 1" = 100'

0 100' 200'

THIS DOCUMENT IS PROVIDED BY BORREGO SOLAR SYSTEMS, INC. TO FACILITATE THE SALE AND INSTALLATION OF A SOLAR POWER SYSTEM FROM BORREGO SOLAR SYSTEMS, INC. REPRODUCTION, RELEASE OR UTILIZATION FOR ANY OTHER PURPOSE, WITHOUT PRIOR WRITTEN CONSENT IS STRICTLY PROHIBITED.

BORREGO SOLAR
55 TECHNOLOGY DRIVE, SUITE 102
LOWELL, MA 01851
PHONE: (888) 898-6273
FAX: (888) 843-6778
WWW.BORREGOSOLAR.COM

NOT FOR CONSTRUCTION

COMMONWEALTH OF MASSACHUSETTS
JEFFREY R. MURPHY
CIVIL
No. 51800
REGISTERED PROFESSIONAL ENGINEER
1/19/2021

SITE USE PLAN
140 THONET ROAD
WAREHAM, MA 02571

PROJECT NUMBER: 905-2708

REV	DATE	DRAWN	CHECKED	RELEASE LEVEL
	03/26/20	WS	CDS	SUP SET CREATION
	05/07/20	WS	CDS	REVISIONS PER NEW FIELD DATA
	06/01/20	LBD	CDS	UPDATED SET TO MATCH DESIGN CHANGES
	06/02/20	WS	CDS	ISSUED FOR LOCAL PERMITTING
	08/19/20	WS	CDS	CREATE SIGHT LINE EXHIBIT
	01/19/21	WS	JM	RESUBMISSION TO LOCAL AHJ

SCALES STATED ON DRAWINGS ARE VALID ONLY WHEN PLOTTED ARCH D 24" X 36"

C-4.1

GRADING AND EROSION CONTROL PLAN - NORTH

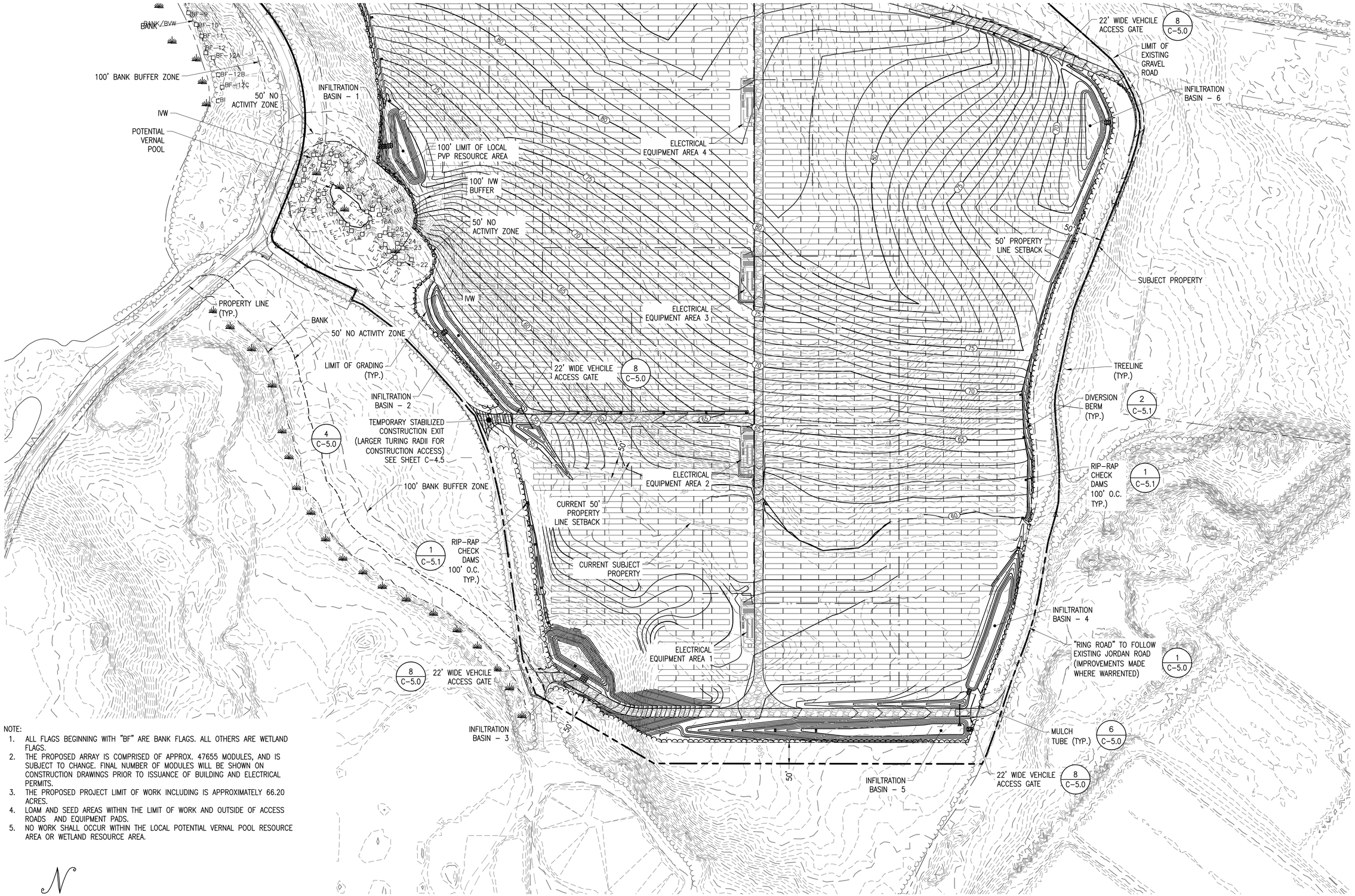

NOTE:

1. ALL FLAGS BEGINNING WITH "BF" ARE BANK FLAGS. ALL OTHERS ARE WETLAND FLAGS.
2. THE PROPOSED ARRAY IS COMPRISED OF APPROX. 47655 MODULES, AND IS SUBJECT TO CHANGE. FINAL NUMBER OF MODULES WILL BE SHOWN ON CONSTRUCTION DRAWINGS PRIOR TO ISSUANCE OF BUILDING AND ELECTRICAL PERMITS.
3. THE PROPOSED PROJECT LIMIT OF WORK INCLUDING IS APPROXIMATELY 66.20 ACRES.
4. LOAM AND SEED AREAS WITHIN THE LIMIT OF WORK AND OUTSIDE OF ACCESS ROADS AND EQUIPMENT PADS.
5. NO WORK SHALL OCCUR WITHIN THE LOCAL POTENTIAL VERNAL POOL RESOURCE AREA OR WETLAND RESOURCE AREA.

GRADING AND EROSION CONTROL PLAN - SOUTH

SCALE: 1" = 100'

0 100' 200'

THIS DOCUMENT IS PROVIDED BY BORREGO SOLAR SYSTEMS, INC. TO FACILITATE THE SALE AND INSTALLATION OF A SOLAR POWER SYSTEM FROM BORREGO SOLAR SYSTEMS, INC. REPRODUCTION, RELEASE OR UTILIZATION FOR ANY OTHER PURPOSE, WITHOUT PRIOR WRITTEN CONSENT IS STRICTLY PROHIBITED.

BORREGO SOLAR
55 TECHNOLOGY DRIVE, SUITE 102
LOWELL, MA 01851
PHONE: (888) 898-6273
FAX: (888) 843-6778
WWW.BORREGOSOLAR.COM

NOT FOR CONSTRUCTION

COMMONWEALTH OF MASSACHUSETTS
JEFFREY R. MURPHY
CIVIL
No. 51800
REGISTERED PROFESSIONAL ENGINEER
1/19/2021

SITE USE PLAN
140 TIHONET ROAD
WAREHAM, MA 02571

PROJECT NUMBER: 905-2708

REV	DATE	DRAWN	CHECKED	RELEASE LEVEL
	03/26/20	WS	CDS	SUP SET CREATION
	05/07/20	WS	CDS	REVISIONS PER NEW FIELD DATA
	06/01/20	LBD	CDS	UPDATED SET TO MATCH DESIGN CHANGES
	06/02/20	WS	CDS	ISSUED FOR LOCAL PERMITTING
	08/19/20	WS	CDS	CREATE SIGHT LINE EXHIBIT
	01/19/21	WS	JM	RESUBMISSION TO LOCAL AHJ

SCALES STATED ON DRAWINGS ARE VALID ONLY WHEN PLOTTED ARCH D 24" X 36"

C-4.2

GRADING AND EROSION CONTROL PLAN - SOUTH

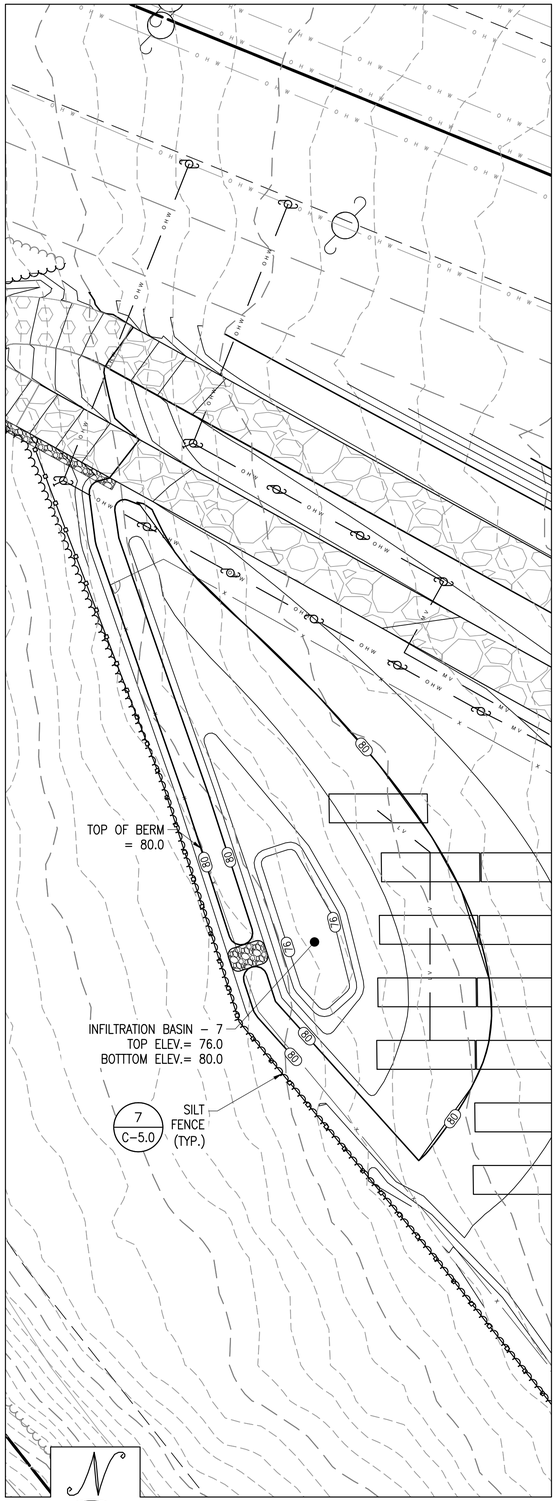

BASINS 7

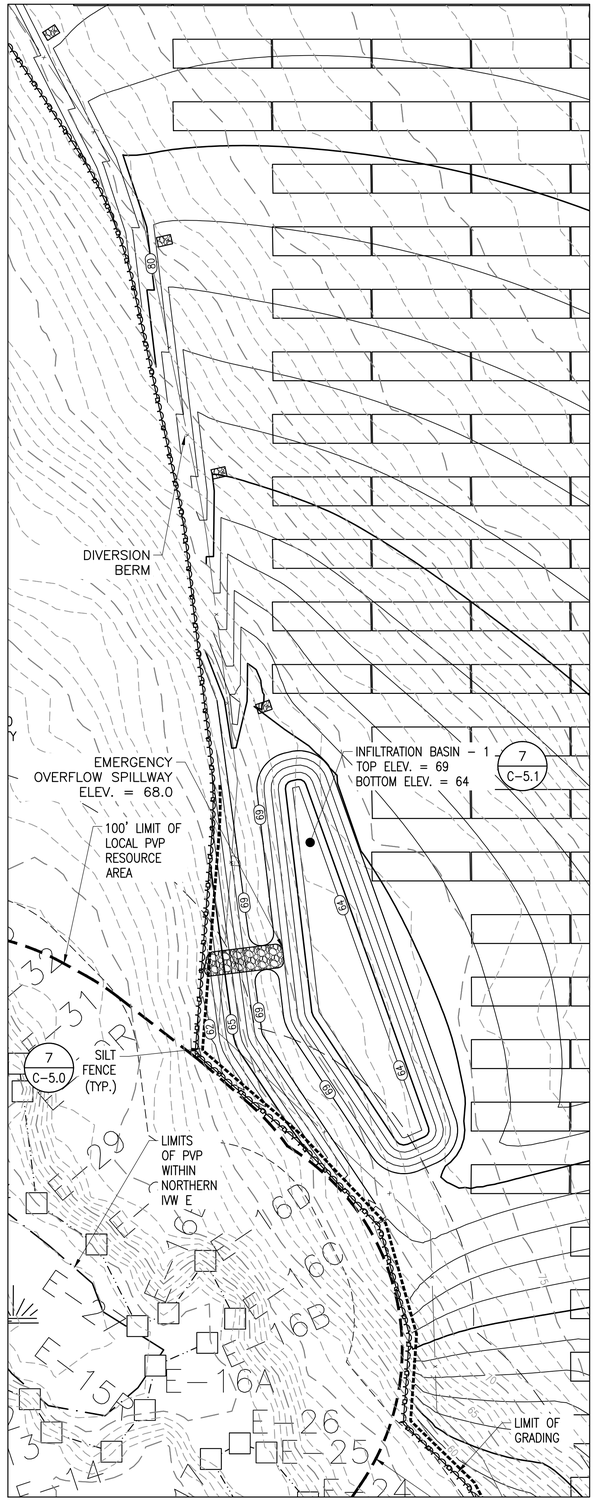

BASIN 1

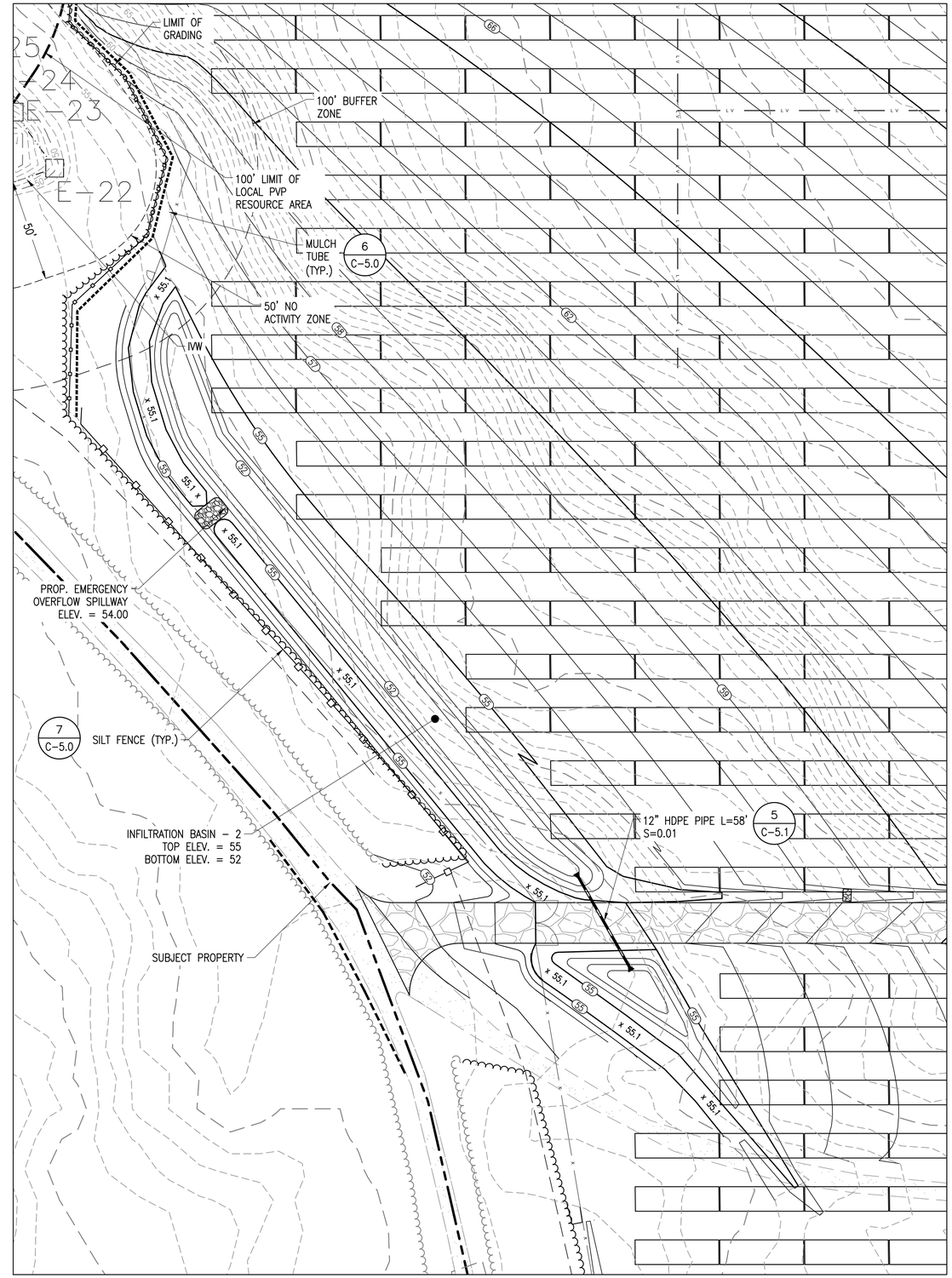

BASIN 2

SCALE: 1" = 30'

0 30' 60'

THIS DOCUMENT IS PROVIDED BY BORREGO SOLAR SYSTEMS, INC. TO FACILITATE THE SALE AND INSTALLATION OF A SOLAR POWER SYSTEM FROM BORREGO SOLAR SYSTEMS, INC. REPRODUCTION, RELEASE OR UTILIZATION FOR ANY OTHER PURPOSE, WITHOUT PRIOR WRITTEN CONSENT IS STRICTLY PROHIBITED.

BORREGO SOLAR
55 TECHNOLOGY DRIVE, SUITE 102
LOWELL, MA 01851
PHONE: (888) 898-6273
FAX: (888) 843-6778
WWW.BORREGOSOLAR.COM

NOT FOR CONSTRUCTION

COMMONWEALTH OF MASSACHUSETTS
JEFFREY R. MURPHY
CIVIL
No. 51800
REGISTERED PROFESSIONAL ENGINEER
1/19/2021

SITE USE PLAN
140 TIHONET ROAD
WAREHAM, MA 02571

PROJECT NUMBER:
905-2708

REV	DATE	DRAWN	CHECKED	RELEASE LEVEL
	03/26/20	WS	CDS	SUP SET CREATION
	05/07/20	WS	CDS	REVISIONS PER NEW FIELD DATA
	06/01/20	LBD	CDS	UPDATED SET TO MATCH DESIGN CHANGES
	06/02/20	WS	CDS	ISSUED FOR LOCAL PERMITTING
	08/19/20	WS	CDS	CREATE SIGHT LINE EXHIBIT
	01/19/21	WS	JM	RESUBMISSION TO LOCAL AHJ

SCALES STATED ON DRAWINGS ARE VALID ONLY WHEN PLOTTED ARCH D 24" X 36"

C-4.3

GRADING AND EROSION CONTROL PLAN - BASIN 7, 1, 2

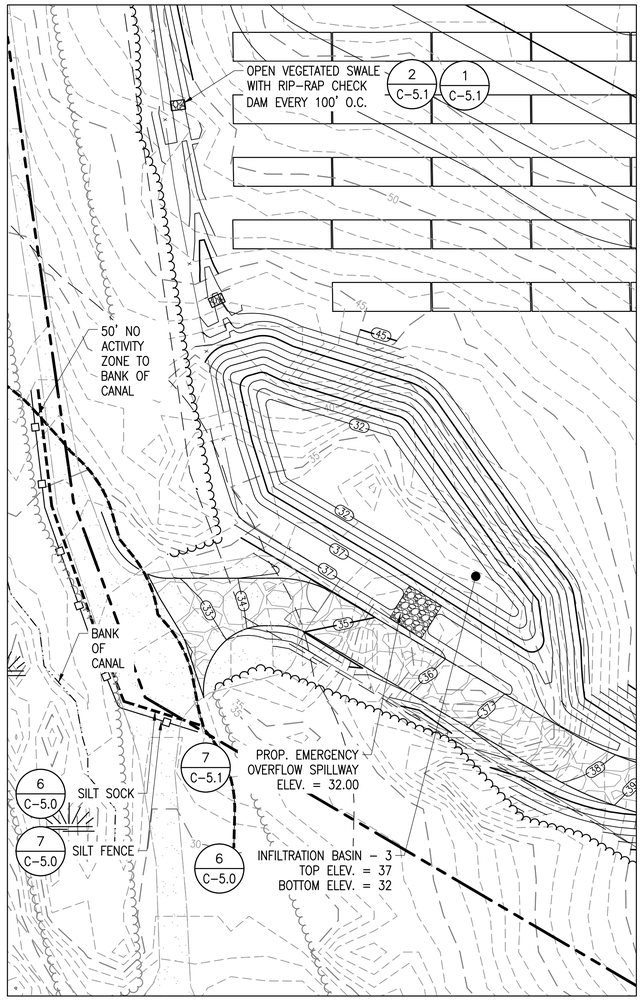

BASIN 3

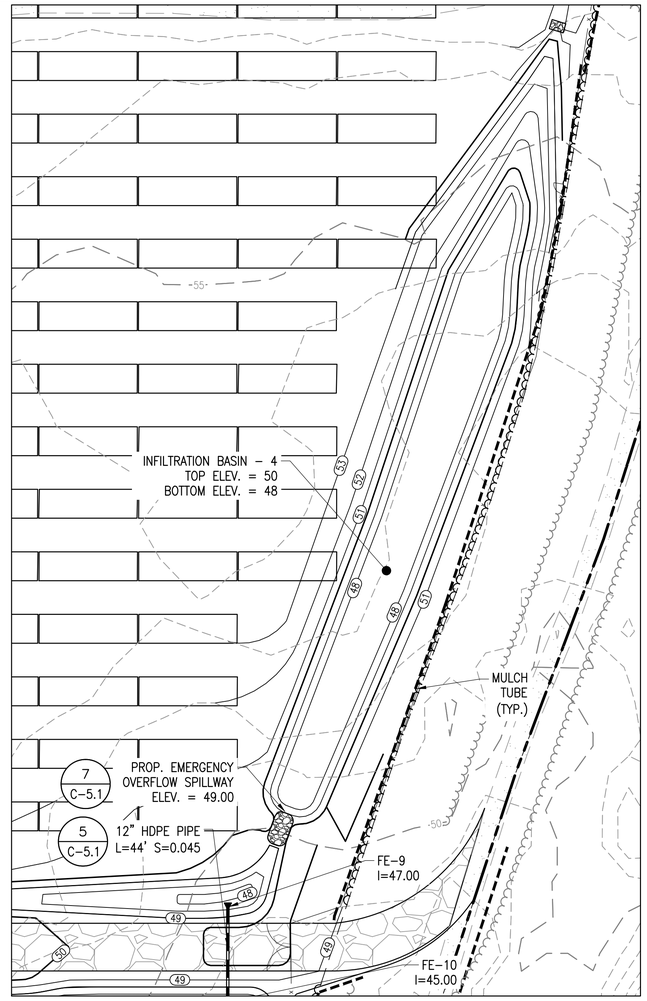

BASIN 4

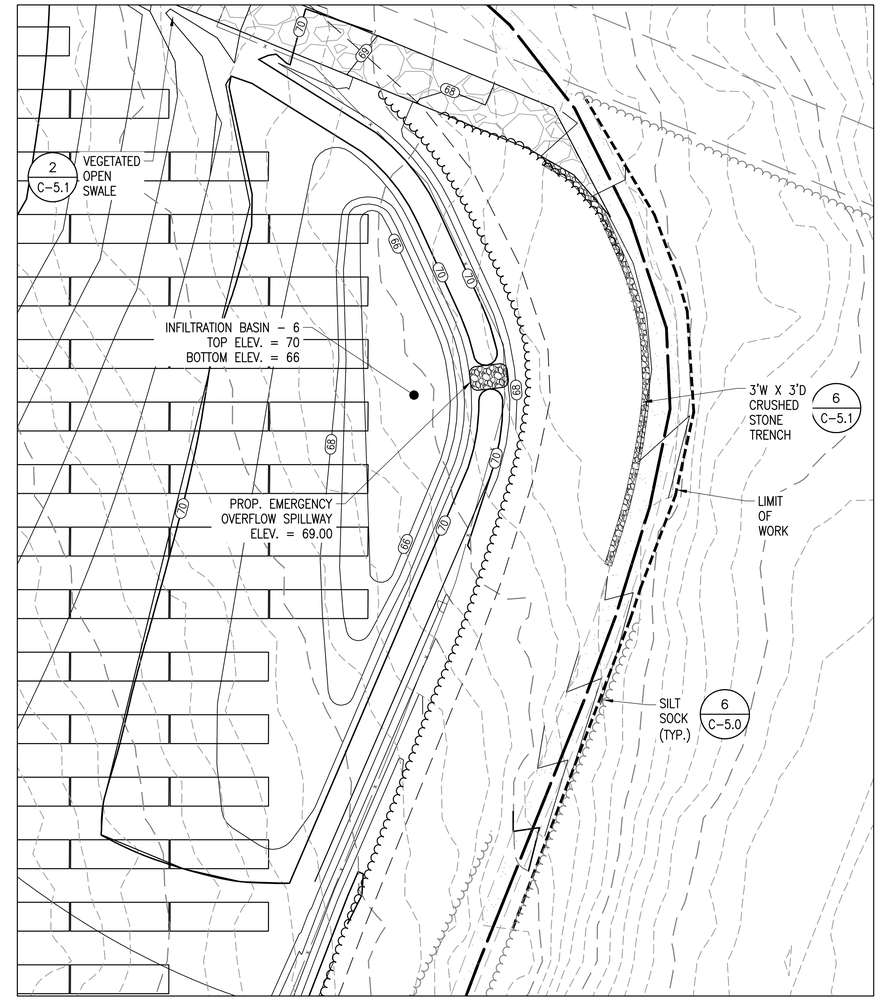

BASIN 6

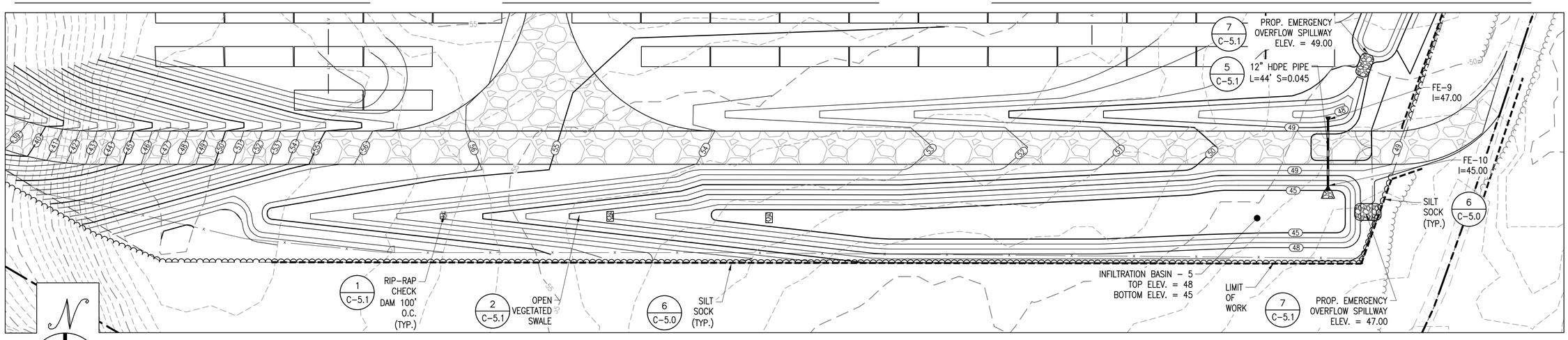

BASIN 5

SCALE: 1" = 30'

0 30' 60'

THIS DOCUMENT IS PROVIDED BY BORREGO SOLAR SYSTEMS, INC. TO FACILITATE THE SALE AND INSTALLATION OF A SOLAR POWER SYSTEM FROM BORREGO SOLAR SYSTEMS, INC. REPRODUCTION, RELEASE OR UTILIZATION FOR ANY OTHER PURPOSE, WITHOUT PRIOR WRITTEN CONSENT IS STRICTLY PROHIBITED.

BORREGO SOLAR
55 TECHNOLOGY DRIVE, SUITE 102
LOWELL, MA 01851
PHONE: (888) 898-6273
FAX: (888) 843-6778
WWW.BORREGOSOLAR.COM

NOT FOR CONSTRUCTION

COMMONWEALTH OF MASSACHUSETTS
JEFFREY R. MURPHY
CIVIL
No. 51800
REGISTERED PROFESSIONAL ENGINEER
1/19/2021

SITE USE PLAN
140 THONET ROAD
WAREHAM, MA 02571

PROJECT NUMBER: 905-2708

REV	DATE	DRAWN	CHECKED	RELEASE LEVEL
	03/26/20	WS	CDS	SUP SET CREATION
	05/07/20	WS	CDS	REVISIONS PER NEW FIELD DATA
	06/01/20	LBD	CDS	UPDATED SET TO MATCH DESIGN CHANGES
	06/02/20	WS	CDS	ISSUED FOR LOCAL PERMITTING
	08/19/20	WS	CDS	CREATE SIGHT LINE EXHIBIT
	01/19/21	WS	JM	RESUBMISSION TO LOCAL AHJ

SCALES STATED ON DRAWINGS ARE VALID ONLY WHEN PLOTTED ARCH D 24" X 36"

C-4.4

GRADING AND EROSION CONTROL PLAN - BASIN 3, 4, 5, 6

NOTE:

1. ALL FLAGS BEGINNING WITH "BF" ARE BANK FLAGS. ALL OTHERS ARE WETLAND FLAGS.
2. THE PROPOSED ARRAY IS COMPRISED OF APPROX. 47655 MODULES, AND IS SUBJECT TO CHANGE. FINAL NUMBER OF MODULES WILL BE SHOWN ON CONSTRUCTION DRAWINGS PRIOR TO ISSUANCE OF BUILDING AND ELECTRICAL PERMITS.
3. THE PROPOSED PROJECT LIMIT OF WORK INCLUDING IS APPROXIMATELY 66.20 ACRES.
4. LOAM AND SEED AREAS WITHIN THE LIMIT OF WORK AND OUTSIDE OF ACCESS ROADS, AND EQUIPMENT PADS.
5. NO WORK SHALL OCCUR WITHIN THE LOCAL POTENTIAL VERNAL POOL RESOURCE AREA.
6. NO WORK SHALL OCCUR WITHIN ANY 50' NO ACTIVITY ZONE TO WETLAND RESOURCE AREA.
7. ALSO SEE NOTE 4 ON SHEET C-2.0 REGARDING LOAMING AND SEEDING OF THE SITE.

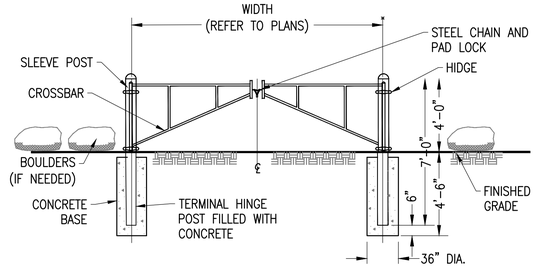

NOTE:
CONTRACTOR SHALL ENSURE NO VEHICULAR ACCESS (INCLUDING MOTORCYCLES, ATV'S, ETC.) AROUND BARRIER GATE.

BARRIER GATE

SCALE: NTS
XD_CIVIL_ACCESS_BARRIER_GATE 10-24-2018

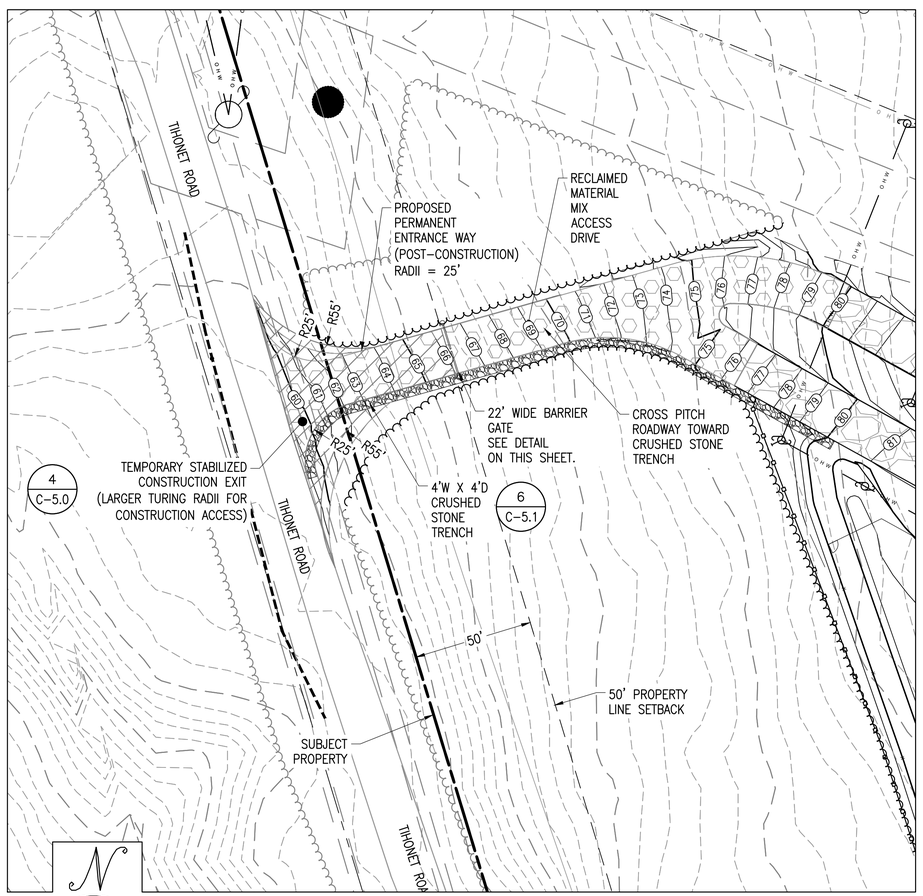

NORTHWEST ENTRANCE

SCALE: 1" = 30'

0 30' 60'

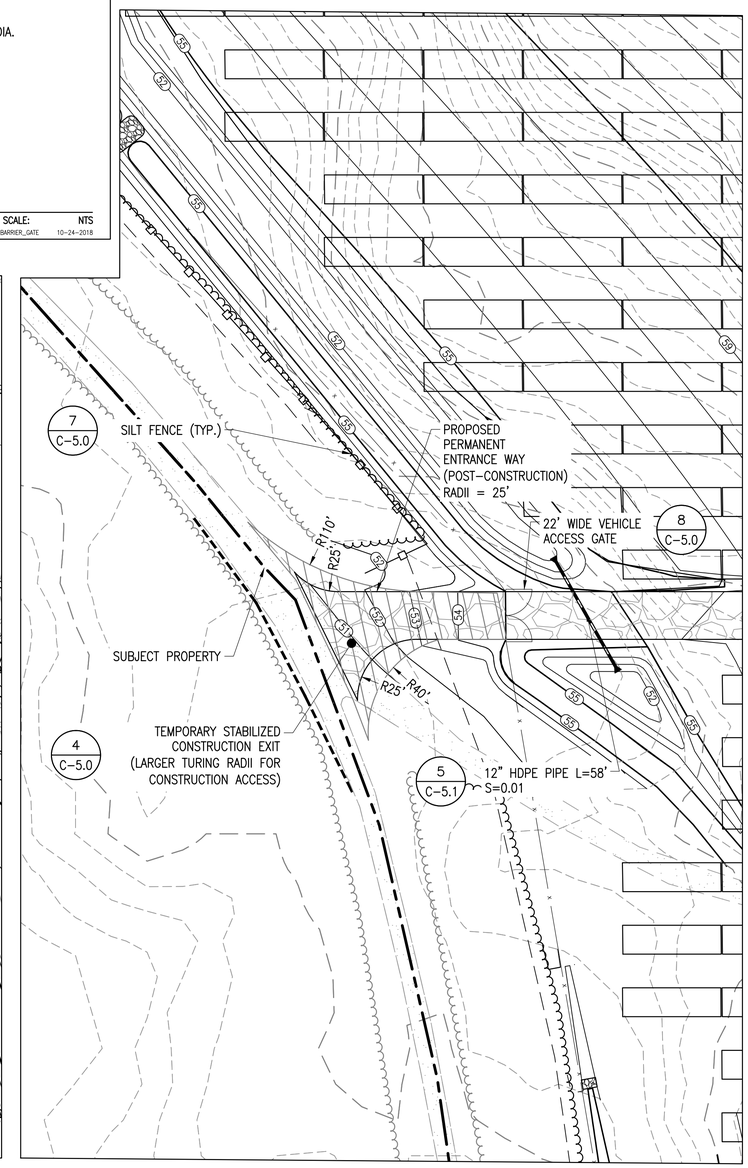

WESTERN ENTRANCE

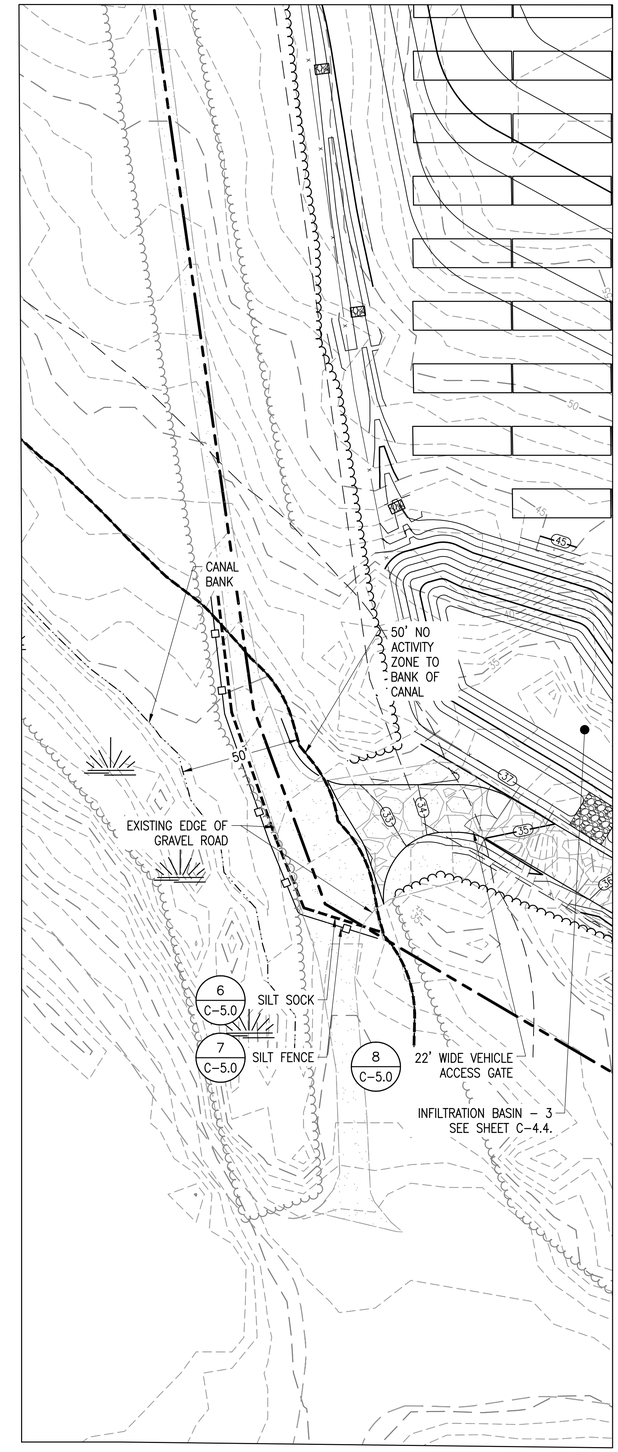

SOUTH WESTERN ENTRANCE - NOT FOR CONSTRUCTION

THIS DOCUMENT IS PROVIDED BY BORREGO SOLAR SYSTEMS, INC. TO FACILITATE THE SALE AND INSTALLATION OF A SOLAR POWER SYSTEM FROM BORREGO SOLAR SYSTEMS, INC. REPRODUCTION, RELEASE OR UTILIZATION FOR ANY OTHER PURPOSE, WITHOUT PRIOR WRITTEN CONSENT IS STRICTLY PROHIBITED.

BORREGO SOLAR
55 TECHNOLOGY DRIVE, SUITE 102
LOWELL, MA 01851
PHONE: (888) 898-6273
FAX: (888) 843-6778
WWW.BORREGOSOLAR.COM

NOT FOR CONSTRUCTION

COMMONWEALTH OF MASSACHUSETTS
JEFFREY R. MURPHY
CIVIL
No. 51800
REGISTERED PROFESSIONAL ENGINEER
1/19/2021

SITE USE PLAN
140 TIHONET ROAD
WAREHAM, MA 02571

PROJECT NUMBER: 905-2708

REV	DATE	DRAWN	CHECKED	RELEASE LEVEL
	03/26/20	WS	CDS	SUP SET CREATION
	05/07/20	WS	CDS	REVISIONS PER NEW FIELD DATA
	06/01/20	LBD	CDS	UPDATED SET TO MATCH DESIGN CHANGES
	06/02/20	WS	CDS	ISSUED FOR LOCAL PERMITTING
	08/19/20	WS	CDS	CREATE SIGHT LINE EXHIBIT
	01/19/21	WS	JM	RESUBMISSION TO LOCAL AHJ

SCALES STATED ON DRAWINGS ARE VALID ONLY WHEN PLOTTED ARCH D 24" X 36"

C-4.5

GRADING AND EROSION CONTROL PLAN - ENTRANCES

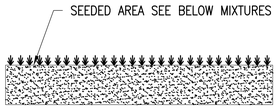

ADM SANDY MIXTURE

CONTAINS	PURE SEED	GERM	ORIGIN
HARD FESCUE*	24.64%	85.00%	OREGON
PENNLAWN CREEPING RED FESCUE	24.61%	85.00%	OREGON
BOREAL CREEPING RED FESCUE	24.51%	85.00%	CANADA
AZURE SHEEPS FESCUE	24.50%	85.00%	OREGON

OTHER CROP SEEDS: 0.16%
INERT MATTER: 1.49%
WEED SEEDS: 0.09%
NOXIOUS WEED SEEDS NONE FOUND
* VARIETY NOT STATED

PROVIDED BY: VALLEY GREEN, 14 COPPERBEECH DR., KINGSTON, MA 02364

10 SEED DETAIL

SCALE: NTS

MAX ALLOWABLE SLOPE LENGTH	
STEEPNESS	MAX LENGTH (FT.)
2:1	25
3:1	50
4:1	75
5+:1	100

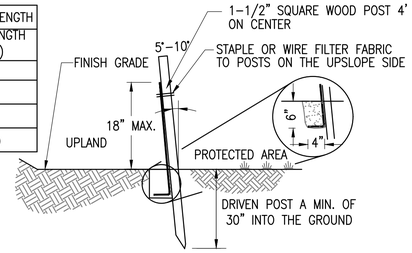

NOTES:

1. MAX DRAINAGE AREA FOR OVERLAND FLOW SHALL NOT EXCEED 1/4 ACRE-FOOT PER 100 FEET OF FENCE.
2. FILTER FABRIC TO BE FASTENED SECURELY TO FENCE POST WITH WIRE TIES OR STAPLES. POST SHALL BE STEEL EITHER "T" OR "U" SHAPED OR HARDWOOD.
3. FILTER CLOTH SHALL BE FASTENED SECURELY WITH TIES SPACED EVERY 24" AT TOP AND MID-SECTION.
4. WHEN TWO SECTIONS OF FILTER CLOTH ADJOIN EACH OTHER THEY SHALL BE OVERLAPPED BY 6 INCHES AND FOLDED. FILTER CLOTH SHALL BE FILTER X, MIRAFI 100X, STABILENKA T140N, OR APPROVED EQUAL.
5. PREFABRICATED UNITS SHALL BE GEOFAB, ENVIROFENCE, OR APPROVED EQUAL.
6. MAINTENANCE SHALL BE PERFORMED AS NEEDED AND MATERIAL REMOVED WHEN "BULGES" DEVELOP IN THE SEDIMENT FENCE.

7 SILT FENCE

SCALE: NTS
XD_CIVIL_EROSION_SILT FENCE_P 2014-10-17

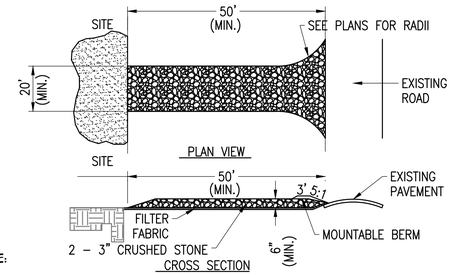

NOTE:

1. ENTRANCE WIDTH SHALL BE A TWENTY (20) FOOT MINIMUM, BUT NOT LESS THAN THE FULL WIDTH AT POINTS WHERE INGRESS OR EGRESS OCCURS.
2. THE ENTRANCE SHALL BE MAINTAINED IN A CONDITION WHICH SHALL PREVENT TRACKING OR FLOWING OF SEDIMENT ONTO PUBLIC RIGHTS-OF-WAY. THIS MAY REQUIRE PERIODIC TOP DRESSING WITH ADDITIONAL STONE AS CONDITIONS DEMAND AND REPAIR OR CLEANOUT OF ANY MEASURES USED TO TRAP SEDIMENT. ALL SEDIMENT SPILLED, DROPPED, WASHED OR TRACKED ONTO PUBLIC RIGHTS-OF-WAY MUST BE REMOVED IMMEDIATELY. BERM SHALL BE PERMITTED. PERIODIC INSPECTION AND MAINTENANCE SHALL BE PROVIDED AS NEEDED.

4 STABILIZED CONSTRUCTION EXIT

SCALE: NTS
XD_CIVIL_TEMPORARY CONSTRUCTION_STABILIZED CONSTRUCTION EXIT 06-10-2016

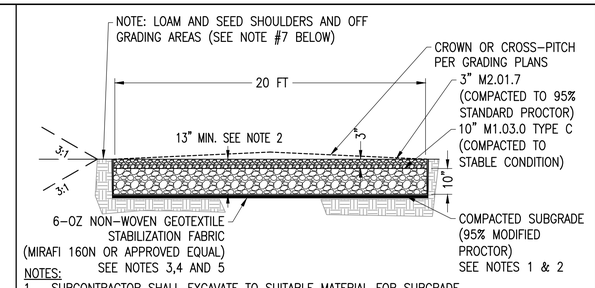

NOTES:

1. SUBCONTRACTOR SHALL EXCAVATE TO SUITABLE MATERIAL FOR SUBGRADE.
2. SUBCONTRACTOR SHALL COMPACT SUBGRADE TO PROVIDE SUITABLE SURFACE TO PLACE ROAD. REFER TO GEOTECHNICAL REPORT FOR SUBGRADE PREPERATION CRITERIA.
3. SUBCONTRACTOR SHALL FOLLOW MANUFACTURER INSTALLATION PROCEDURES.
4. WHERE OVERLAPPING OF GEOTEXTILE FABRIC IS REQUIRED, SUBCONTRACTOR SHALL OVERLAP A MINIMUM OF 24".
5. SUBCONTRACTOR SHALL REMOVE TEMPORARY CONSTRUCTION ACCESS ROADS, AND RESTORE TO PRE-CONSTRUCTION CONDITIONS TO THE SATISFACTION OF THE CEOR AND THE GOVERNING AGENCIES.
6. SUBCONTRACTOR SHALL INSTALL CONDUITS FOR ALL ELECTRICAL CONDUIT CROSSINGS PRIOR TO INSTALLATION OF THE GEOGRID MATERIAL. THE GEOGRID SHALL NOT BE HORIZONTALLY CUT ONCE INSTALLED.
7. SEE NOTE #4 ON SHEETS C-3.1, 3.2, 4.1, 4.2, 4.5, AND NOTE #3 ON SHEET C-2.0 REGARDING LOAMING AND SEEDING OF SITE.

1 GRAVEL ACCESS ROAD

SCALE: NTS
XD_CIVIL_GRAVEL_ROAD_MA 09-28-2020

THIS DOCUMENT IS PROVIDED BY BORREGO SOLAR SYSTEMS, INC. TO FACILITATE THE SALE AND INSTALLATION OF A SOLAR POWER SYSTEM FROM BORREGO SOLAR SYSTEMS, INC. REPRODUCTION, RELEASE OR UTILIZATION FOR ANY OTHER PURPOSE, WITHOUT PRIOR WRITTEN CONSENT IS STRICTLY PROHIBITED.

BORREGO SOLAR
55 TECHNOLOGY DRIVE, SUITE 102
LOWELL, MA 01851
PHONE: (888) 898-6273
FAX: (888) 843-6778
WWW.BORREGOSOLAR.COM

NOT FOR CONSTRUCTION

COMMONWEALTH OF MASSACHUSETTS
JEFFREY R. MURPHY
CIVIL
No. 51800
REGISTERED PROFESSIONAL ENGINEER
1/19/2021

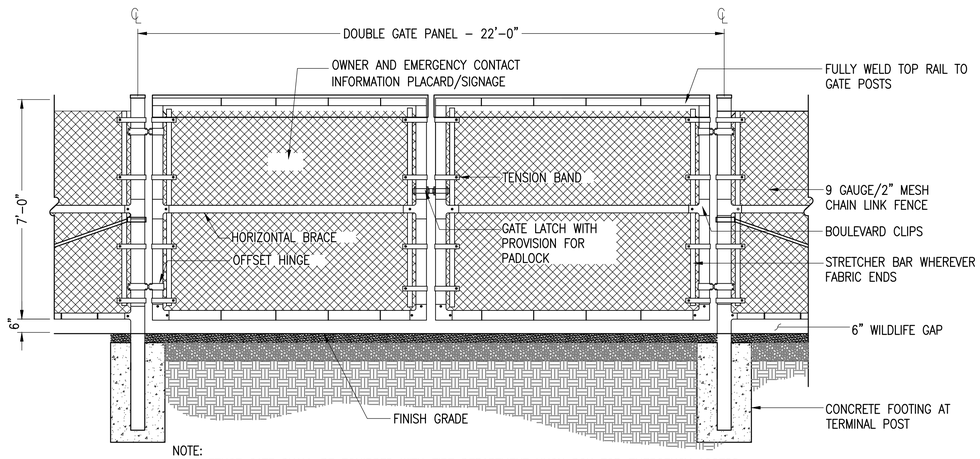

NOTE:

1. FENCE GATE SHALL BE EQUIPPED WITH FIRE DEPARTMENT KNOX BOX FOR EMERGENCY ACCESS.

8 VEHICLE GATE - WILDLIFE GAP

SCALE: NTS
XD_CIVIL_FENCE_VEHICLE GATE_7' 10-23-2018

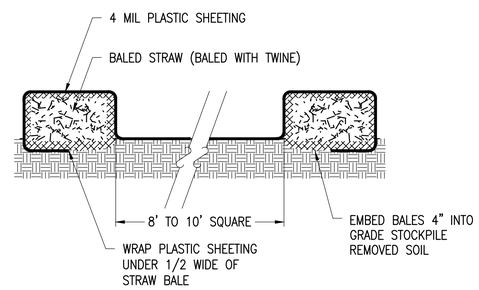

NOTE: PLASTIC SHEETING SHALL BE FREE OF TEARS OR HOLES. AFTER BASIN IS USED, WASHWATER FROM WASHOUT BASIN SHALL EVAPORATE OR BE VACUUMED OUT. REMOVE REMAINING HARDENED SOLIDS. REPLACE PLASTIC SHEETING AND STRAWBALES AS REQUIRED.

5 CONCRETE WASHOUT BASINS

SCALE: NTS
XD_CIVIL_CONCRETE WASHOUT BASINS 07-24-2017

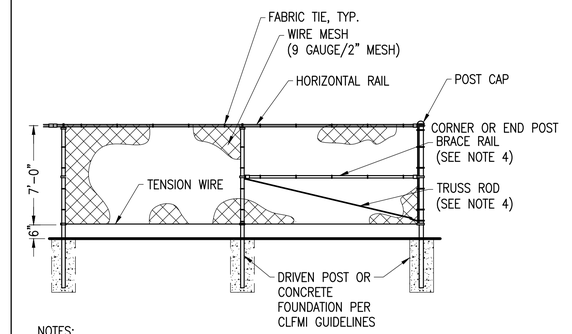

NOTES:

1. THE FENCE SHALL MEET OR EXCEED THE CHAIN LINK FENCE MANUFACTURER INSTITUTE (CLFMI) GUIDELINES AND RELATED FEDERAL SPECIFICATIONS FOR SECURITY CHAIN LINK FENCE MATERIALS AND INSTALLATION.
2. FENCE MATERIAL AND COMPONENTS SHALL BE GALVANIZED, UNLESS OTHERWISE NOTED.
3. THIS DETAIL NOT APPLICABLE FOR PRIVACY FENCE OR FENCE WITH SLATS.
4. ADJUSTABLE TRUSS ROD AND BRACE RAIL AT CORNER OR END POSTS ONLY, IF REQUIRED BY CLFMI GUIDELINES.

2 CHAIN LINK FENCE - WILDLIFE GAP

SCALE: NTS
XD_CIVIL_FENCE_7'_CHAIN_LINK_WILDLIFE_GAP 06-27-2016

NOTE: THE "TERRAFARM" RACKING AND GROUND SCREW FOUNDATIONS ARE DESIGNED BY TERRASMART AND WILL BE A SUBMITTAL TO BORREGO. THE INFORMATION SHOWN HERE IS FOR GENERAL REFERENCE ONLY. 2x10 RACKING CONFIGURATION SHOWN IN THIS DETAIL AS REFERENCE. ACTUAL RACK SIZE FOR THIS PROJECT MAY VARY.

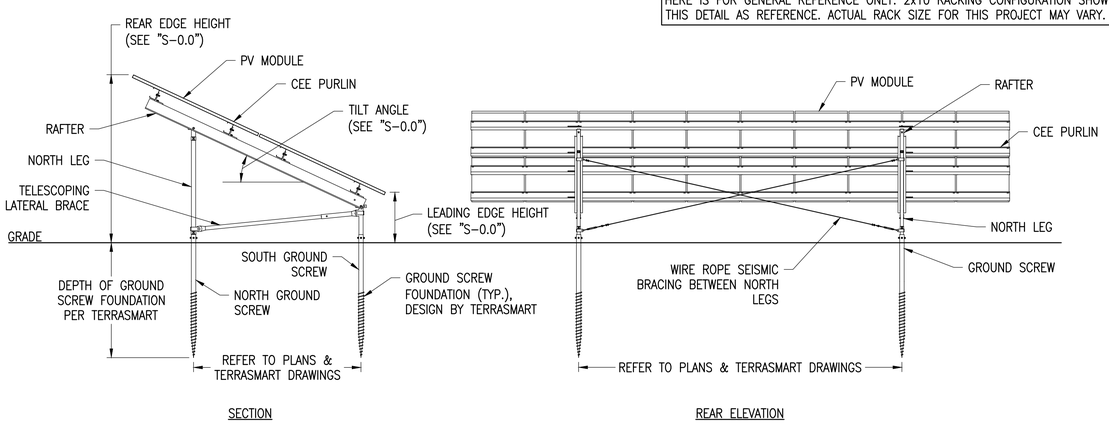

9 TYPICAL RACK SECTION & REAR ELEVATION

TERRASMART TF2P

SCALE: NTS
XD_STRUC_TERRASMART_TF2P_RACK SECT & REAR ELEV 2017-12-04

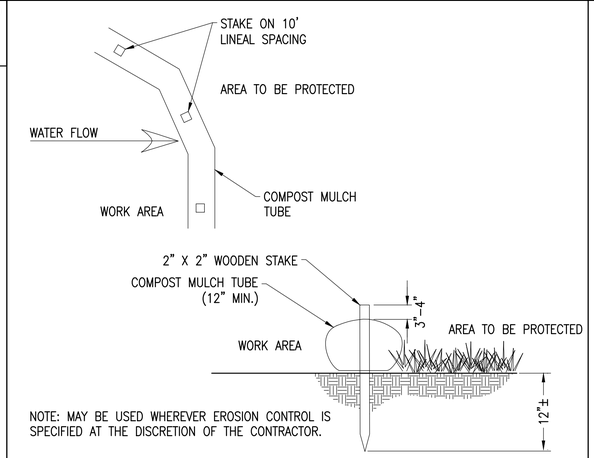

NOTE: MAY BE USED WHEREVER EROSION CONTROL IS SPECIFIED AT THE DISCRETION OF THE CONTRACTOR.

6 MULCH TUBE

SCALE: NTS
XD_CIVIL_FILTREXX_FILTER_SOCK 03-29-2016

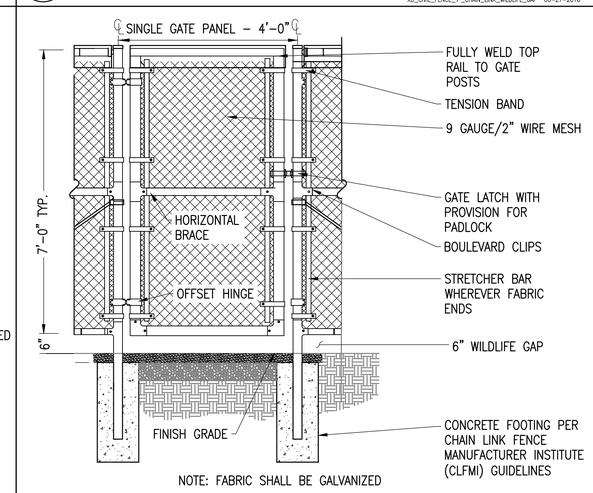

NOTE: FABRIC SHALL BE GALVANIZED

3 4' MAN GATE - WILDLIFE GAP

SCALE: NTS
XD_CIVIL_SITE CONSTRUCTION_4' WALK THROUGH GATE 07-25-2017

SITE USE PLAN
140 TIHONET ROAD
WAREHAM, MA 02571

PROJECT NUMBER: 905-2708

REV	DATE	DRAWN	CHECKED	RELEASE LEVEL
	03/26/20	WS	CDS	SUP SET CREATION
	05/07/20	WS	CDS	REVISIONS PER NEW FIELD DATA
	06/01/20	LBD	CDS	UPDATED SET TO MATCH DESIGN CHANGES
	06/02/20	WS	CDS	ISSUED FOR LOCAL PERMITTING
	08/19/20	WS	CDS	CREATE SIGHT LINE EXHIBIT
	01/19/21	WS	JM	RESUBMISSION TO LOCAL AHJ

SCALES STATED ON DRAWINGS ARE VALID ONLY WHEN PLOTTED ARCH D 24" X 36"

C-5.0
CIVIL DETAILS

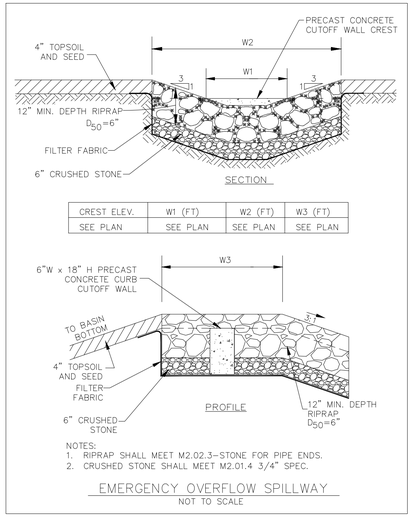

CREST ELEV.	W1 (FT)	W2 (FT)	W3 (FT)
SEE PLAN	SEE PLAN	SEE PLAN	SEE PLAN

NOTES:
1. RIPRAP SHALL MEET M2.02.3-STONE FOR PIPE ENDS.
2. CRUSHED STONE SHALL MEET M2.01.4 3/4" SPEC.

EMERGENCY OVERFLOW SPILLWAY
NOT TO SCALE

7

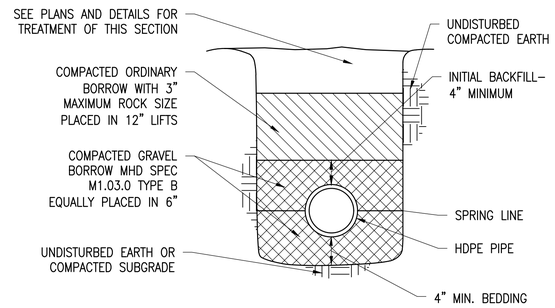

NOTES:
1. TRENCH EXCAVATION WIDTH TO ALLOW FOR FREE TRAVEL OF COMPACTION EQUIPMENT.
2. ALL COMPACTION TO A MINIMUM 95 PERCENT DRY DENSITY DETERMINED BY ASTM D1557 SEE SPECIFICATIONS FOR ADDITIONAL REQUIREMENTS.

5 HDPE DRAIN PIPE BEDDING

SCALE: NTS
XD_CIVIL_D_HDPE DRAIN PIPE BEDDING 06-28-2016

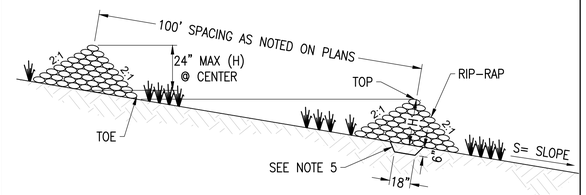

NOTES:
1. MAXIMUM DRAINAGE AREA ≤ 2 ACRES
2. USE 6" RIP-RAP
3. H=24" MAX @ CENTER
4. RIP-RAP SHALL BE PLACED ON A FILTER FABRIC FOUNDATION
5. INSTALL 6" DEEP CUT-OFF TRENCH BELOW
6. EXTEND THE STONE A MINIMUM OF 1.5' BEYOND THE DITCH BANKS TO PREVENT CUTTING AROUND THE DAM

1 RIP-RAP CHECK DAM

SCALE: N.T.S.
XD_CIVIL_CHECK DAM 08-15-2016

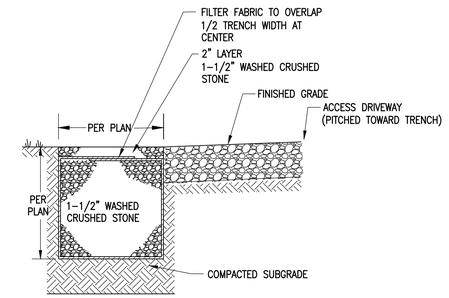

NOTE:
1. ALL DISTURBED AREAS TO BE SEEDED. SEE DETAIL 10 ON SHEET C-5.0.

6 CRUSHED STONE TRENCH

SCALE: NTS

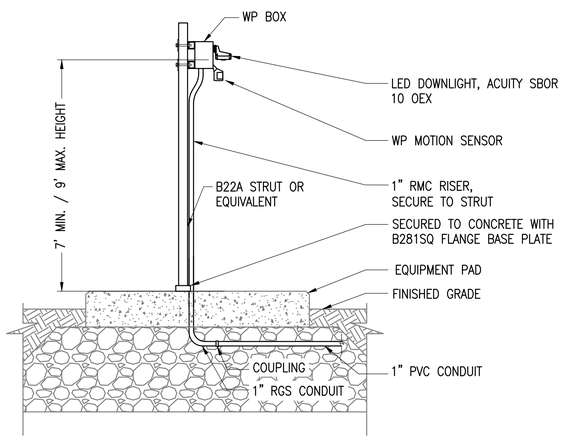

8 LIGHTING MOUNTING - DOWNLIGHT

SCALE: NTS
XD_ELEC_ LIGHT MOUNTING-DOWNLIGHT 2018-06-22 JPL

NOTES:
1. ALL RIP RAP DIMENSIONS SHALL BE AS NOTED ON GRAVEL AND DRAINAGE PLANS

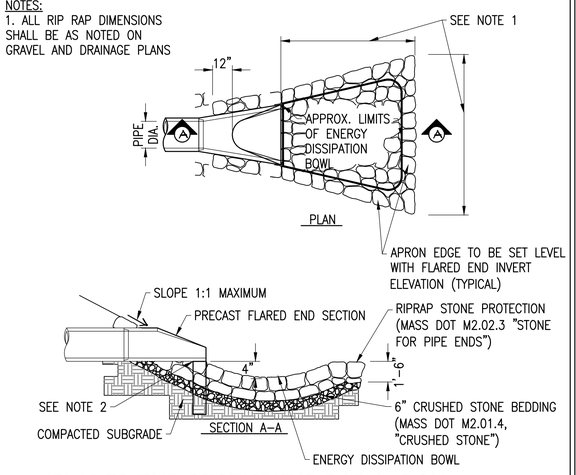

4 FLARED END SECTION/RIP-RAP APRON

SCALE: NTS
XD_CIVIL_DRAINAGE_FLARED END SECTION RIP-RAP APRON 2016-08-15

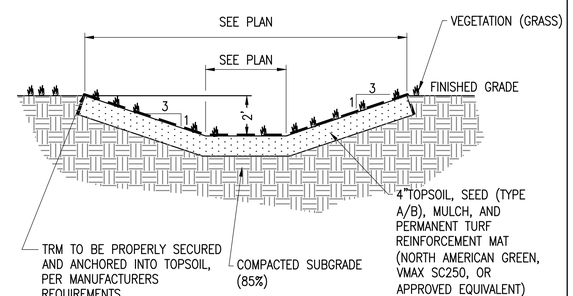

2 VEGETATED OPEN SWALE

SCALE: NTS
XD_CIVIL_DRAINAGE_ROCK-LINED_SWALE 06-27-2016

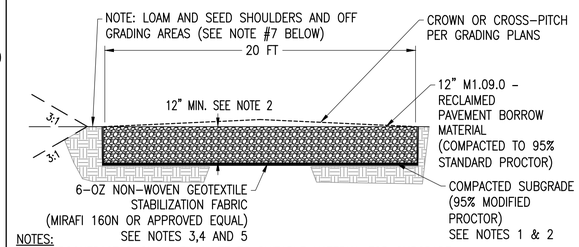

NOTES: SEE NOTES 3,4 AND 5
1. SUBCONTRACTOR SHALL EXCAVATE TO SUITABLE MATERIAL FOR SUBGRADE.
2. SUBCONTRACTOR SHALL COMPACT SUBGRADE TO PROVIDE SUITABLE SURFACE TO PLACE ROAD. REFER TO GEOTECHNICAL REPORT FOR SUBGRADE PREPERATION CRITERIA.
3. SUBCONTRACTOR SHALL FOLLOW MANUFACTURER INSTALLATION PROCEDURES.
4. WHERE OVERLAPPING OF GEOTEXTILE FABRIC IS REQUIRED, SUBCONTRACTOR SHALL OVERLAP A MINIMUM OF 24".
5. SUBCONTRACTOR SHALL REMOVE TEMPORARY CONSTRUCTION ACCESS ROADS, AND RESTORE TO PRE-CONSTRUCTION CONDITIONS TO THE SATISFACTION OF THE CEOR AND THE GOVERNING AGENCIES.
6. SUBCONTRACTOR SHALL INSTALL CONDUITS FOR ALL ELECTRICAL CONDUIT CROSSINGS PRIOR TO INSTALLATION OF THE GEOGRID MATERIAL. THE GEOGRID SHALL NOT BE HORIZONTALLY CUT ONCE INSTALLED.
7. SEE NOTE #4 ON SHEETS C-3.1, 3.2, 4.1, 4.2, 4.5, AND NOTE #3 ON SHEET C-2.0 REGARDING LOAMING AND SEEDING OF SITE.

7 RECLAIMED PAVEMENT BORROW DRIVEWAY

SCALE: NTS
XD_CIVIL_GRAVEL_ROAD_MA 09-28-2020

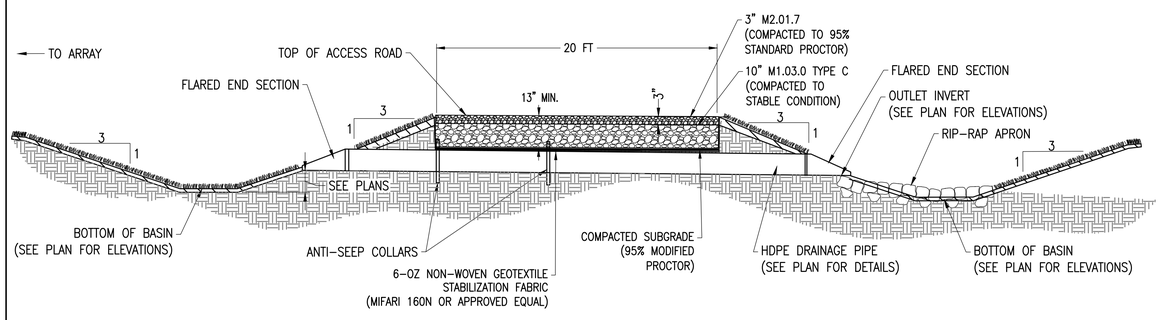

3 CULVERT CROSSING ACCESS ROAD - BASIN TO BASIN

SCALE: NTS
XD_CIVIL_DRAINAGE_DETENTION BASIN WITH RISER 08-16-2018

NOTES:
1. ALL DIMENSIONS TO BE COORDINATED WITH PLANS.

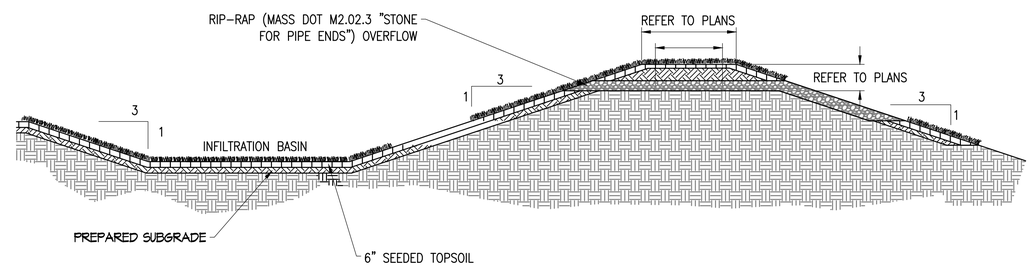

8 INFILTRATION BASIN - NO OUTLET PIPE

SCALE: NTS
XD_CIVIL_DRAINAGE_INFILTRATION BASIN_NO PIPE 12-08-2020

THIS DOCUMENT IS PROVIDED BY BORREGO SOLAR SYSTEMS, INC. TO FACILITATE THE SALE AND INSTALLATION OF A SOLAR POWER SYSTEM FROM BORREGO SOLAR SYSTEMS, INC. REPRODUCTION, RELEASE OR UTILIZATION FOR ANY OTHER PURPOSE, WITHOUT PRIOR WRITTEN CONSENT IS STRICTLY PROHIBITED.

BORREGO SOLAR
55 TECHNOLOGY DRIVE, SUITE 102
LOWELL, MA 01851
PHONE: (888) 898-6273
FAX: (888) 843-6778
WWW.BORREGOSOLAR.COM

NOT FOR CONSTRUCTION

COMMONWEALTH OF MASSACHUSETTS
JEFFREY R. MURPHY
CIVIL
No. 51800
REGISTERED PROFESSIONAL ENGINEER
1/19/2021

SITE USE PLAN
140 THONET ROAD
WAREHAM, MA 02571

PROJECT NUMBER: 905-2708

REV	DATE	DRAWN	CHECKED	RELEASE LEVEL
	03/26/20	WS	CDS	SLIP SET CREATION
	05/07/20	WS	CDS	REVISIONS PER NEW FIELD DATA
	06/01/20	LBD	CDS	UPDATED SET TO MATCH DESIGN CHANGES
	06/02/20	WS	CDS	ISSUED FOR LOCAL PERMITTING
	08/19/20	WS	CDS	CREATE SIGHT LINE EXHIBIT
	01/19/21	WS	JM	RESUBMISSION TO LOCAL AHJ

SCALES STATED ON DRAWINGS ARE VALID ONLY WHEN PLOTTED ARCH D 24" X 36"

C-5.1
CIVIL DETAILS

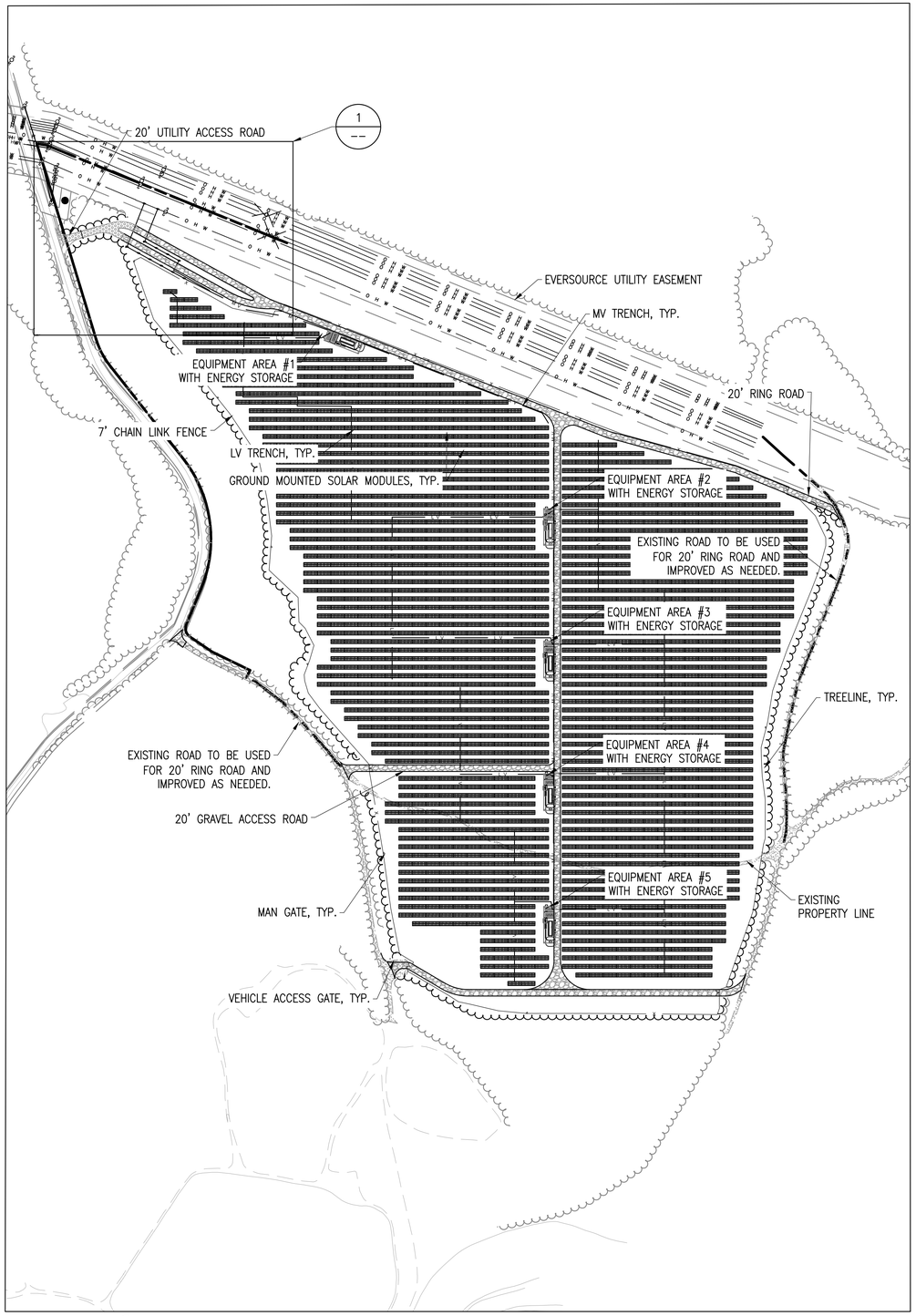

ELECTRICAL SITE PLAN

SCALE: 1" = 200'

0 200' 400'

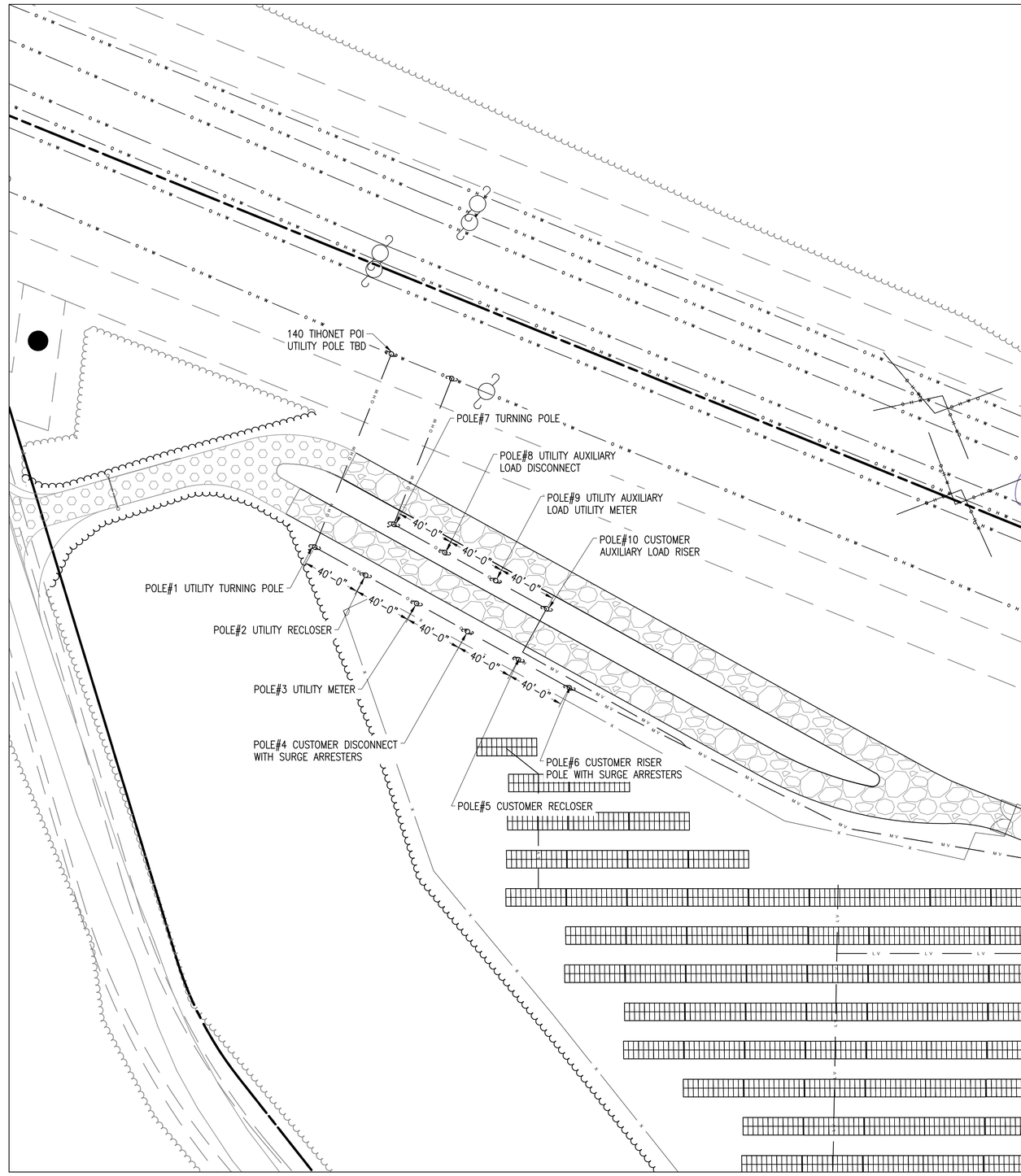

1

DETAIL VIEW

SCALE: 1" = 40'

0 40' 80'

THIS DOCUMENT IS PROVIDED BY BORREGO SOLAR SYSTEMS, INC. TO FACILITATE THE SALE AND INSTALLATION OF A SOLAR POWER SYSTEM FROM BORREGO SOLAR SYSTEMS, INC. REPRODUCTION, RELEASE OR UTILIZATION FOR ANY OTHER PURPOSE, WITHOUT PRIOR WRITTEN CONSENT IS STRICTLY PROHIBITED.

BORREGO SOLAR
55 TECHNOLOGY DRIVE, SUITE 102
LOWELL, MA 01851
PHONE: (888) 898-6273
FAX: (888) 843-6778
WWW.BORREGOSOLAR.COM

NOT FOR CONSTRUCTION

COMMONWEALTH OF MASSACHUSETTS
CHARLES D. SMITH
CIVIL
No. 52136
REGISTERED PROFESSIONAL ENGINEER

Charles D. Smith
1/19/21

SITE USE PLAN
140 TIHONET ROAD
WAREHAM, MA 02571

PROJECT NUMBER:
905-2708

REV	DATE	DRAWN	CHECKED	RELEASE LEVEL	
	03/26/20	WS	CDS	SUP	SET CREATION
	05/07/20	WS	CDS		REVISIONS PER NEW FIELD DATA
	06/01/20	LBD	CDS		UPDATED SET TO MATCH DESIGN CHANGES
	06/02/20	WS	CDS		ISSUED FOR LOCAL PERMITTING
	08/19/20	WS	CDS		CREATE SIGHT LINE EXHIBIT
	01/19/21	WS	JM		RESUBMISSION TO LOCAL AHJ

SCALES STATED ON DRAWINGS ARE VALID ONLY WHEN PLOTTED ARCH D 24" X 36"

E-1.0
ELECTRICAL SITE PLAN