#3-21

PROVIDE AT LEAST ONE 20" ACCESS PORT WITHIN 6" OF FINAL GRADE. IF SET AT GRADE PORTS SHALL BE SECURED TO PREVENT UNAUTHORIZED ACCESS

NOTE ; THE CONTRACTOR FOR THE REQUIRE

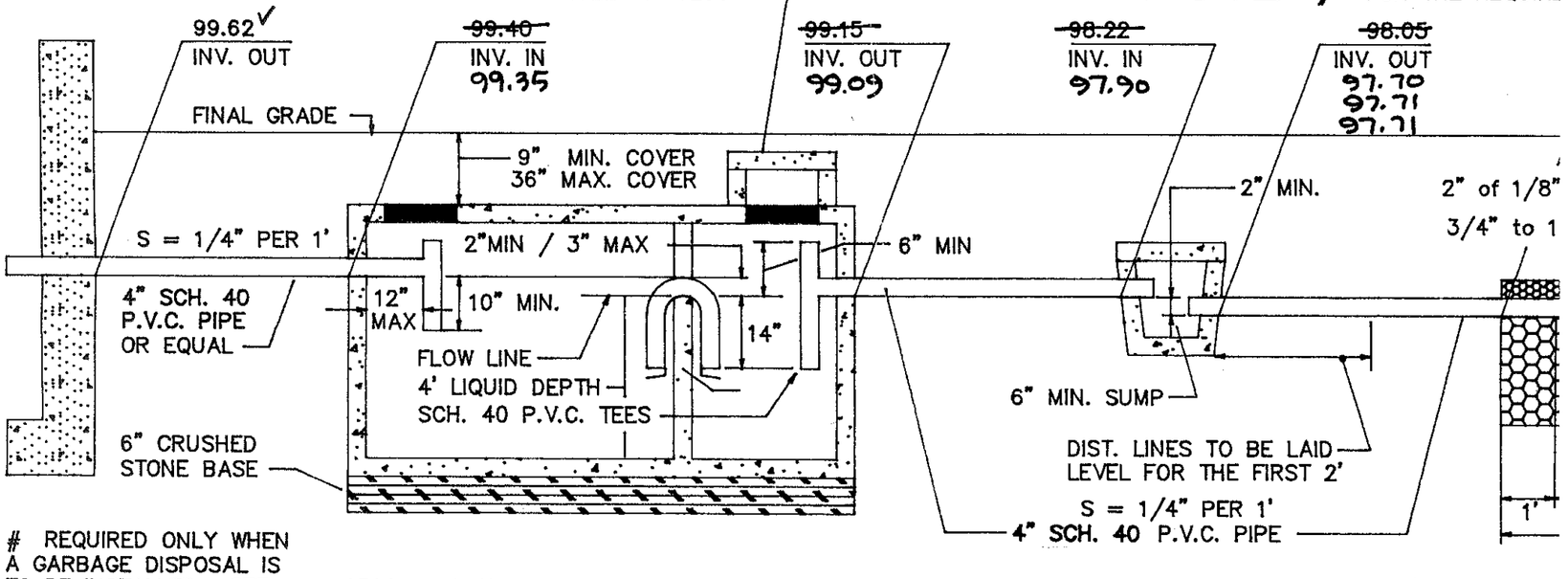

REQUIRED ONLY WHEN A GARBAGE DISPOSAL IS TO BE INSTALLED, SEE SPECS. FOR DETAILS

1500 GALLON
PRECAST CONCRETE SEPTIC TANK

3 OUTLET PRECAST
DISTRIBUTION BOX

(MIN. 12" SQ. INSIDE BOX)

LEACH
SOIL

BOTT

SEWAGE DISPOSAL SYSTEM PROFILE

BENCHMARK; NAIL IN POLE S/1, ELEV. = 102.60

2' x 42' LEACHING TRENCHES, 3 REQ'D.

2' x 42' RESERVE AREAS

NOTE ; CENTER TO CENTER SPACING FOR THE PRIMARY TRENCH LAYOUT IS 8'

S 30°42'50" E
118.60'

EXISTING

EXIST

TEST HOLE 2
EL. 100.1

62'

40'

S 49°31'20" E
71.73'

CROSS ROAD

1500 GALLON SEPTIC

128'

10'

S 40°35'20" E
124.29'

AS-BUILT LOCATIONS

EXISTING CESSPOOL / SEE

TEST HOLE NO. 1 / EL. 99.5

52'

L=261.02'
R=862.80'

COUNTY ROAD

EDGE OF

CO.BD.
FND.

PLAN

SCALE; 1" = 30'

NOTE ; THE EXISTING CESSPOOL IS TO BE ABANDONED. IT SHALL BE PUMPED DRY AND THEN COLLAPSED AND / OR FILLED COMPLETELY WITH CLEAN SAND

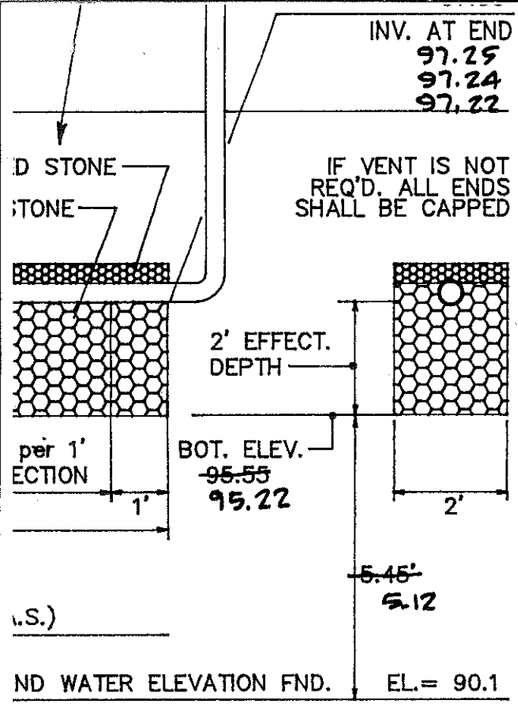

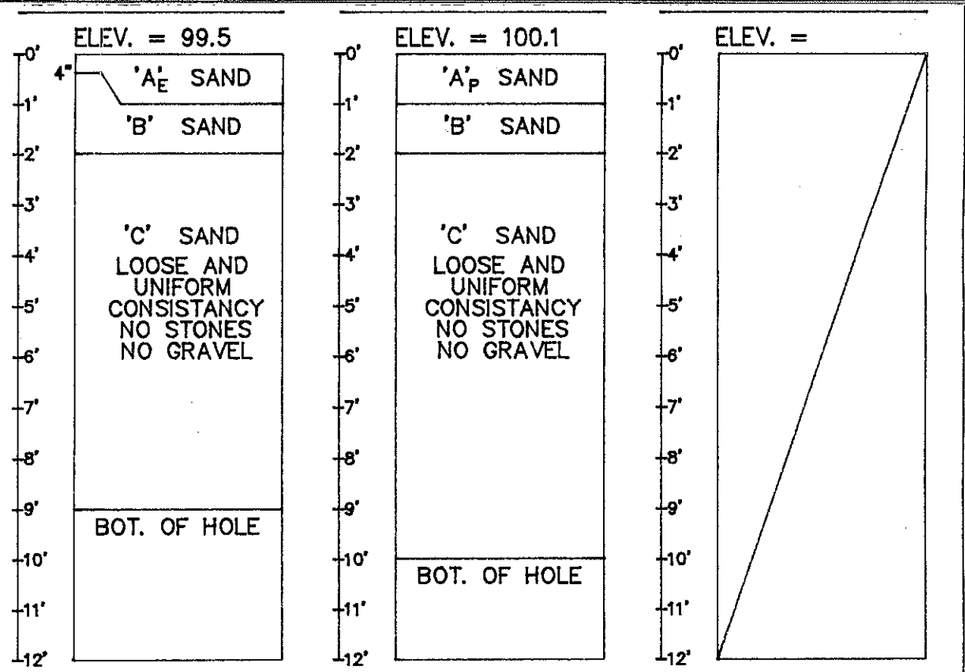

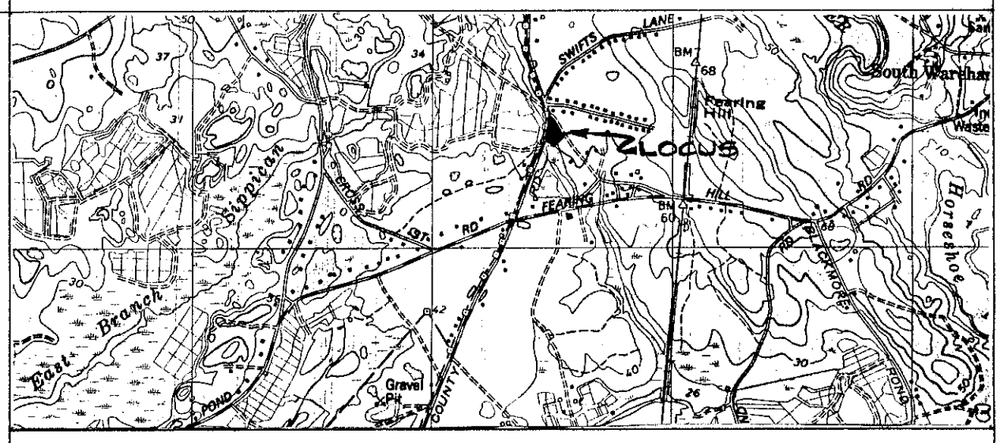

LOCUS MAP
FROM U.S.G.S. SNIPATUIT QUADRANGLE
SCALE ; 1 : 25,000

Plan shows the As-Built locations and elevations obtained on 7/2/97 .

Charles L. Rowley PE 7/2/97

DESIGN CALCULATIONS ; AS REQUIRED BY THE STATE ENVIRONMENTAL CODE TITLE FIVE, AND THE ADDITIONAL TOWN OF WAREHAM LOCAL BY – LAWS

Perc Test at Hole No. 2, at 58", Rate = <2 min/inch, Test Date; 5/14/97
Design for 4 Bedroom Dwelling; (4+1=5) Use 110 Gallons / Bedroom
FLOW = 5 Bedrooms x 110 Gallons / Bedroom = 550 Gallons / Required
SEPTIC TANK : 2 x 550 Gallons = 1100 Gallons. USE 1,500 GALLON TANK
SOIL ABSORPTION AREA : Using a percolation rate of < 2 min./ per inch
Bottom Area ; 0.74 gallons / sq. ft. x 84.0 sq. ft. = 62.16 gallons
Sidewall Area ; 0.74 gallons / sq. ft. x 176.0 sq. ft. = 130.24 gallons
Each Trench provides = 192.40 gallons

3 Trenches x 192.40 GPD each Trench = 577.20 Total Gallons Per Day
Use 3 Trenches ; each 2' wide x 42' long, with a 2' effective depth

FOR THE PURPOSE OF CONSTRUCTION, THIS PLAN AND THE ACCOMPANYING SPECIFICATION SHALL BE CONSIDERED AS ONE DOCUMENT, WHICH SHALL BE ADHERED TO IN ALL RESPECTS.

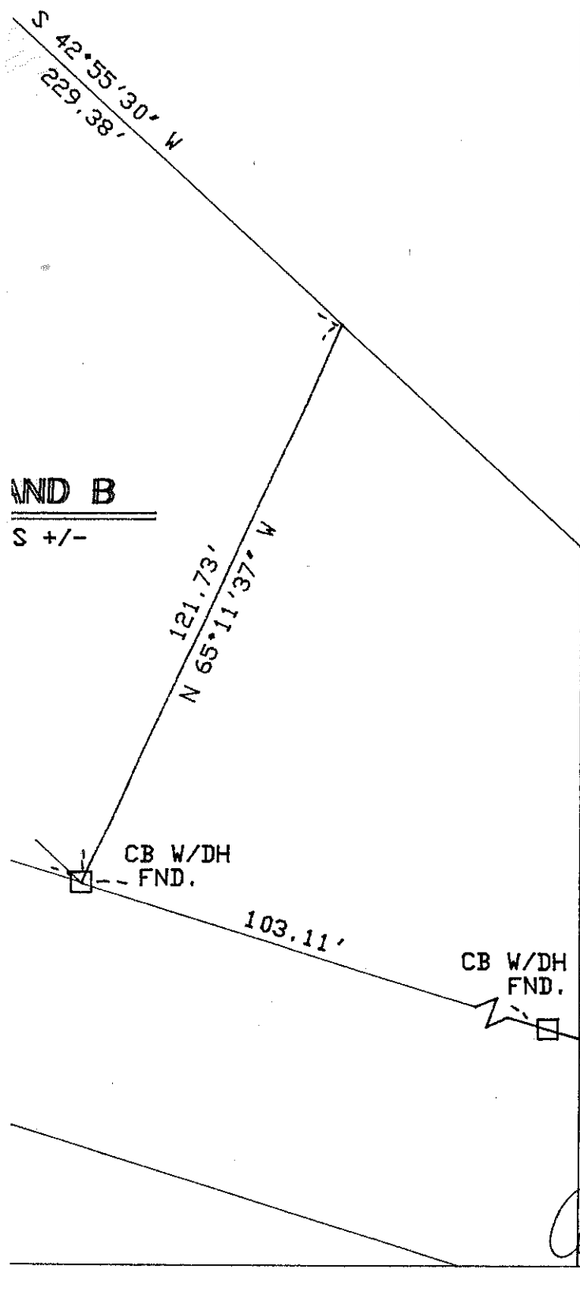

PLAN OF ON – SITE SEWAGE DISPOSAL SYSTEM FOR LOTS A & B, ASSESSORS SHEET NO. 93.

172 COUNTY ROAD AT CROSS ROAD
WEST WAREHAM, MA.

PREPARED FOR

G. W. STACEY & COMPANY

COMMONWEALTH OF MASSACHUSETTS
CHARLES L. ROWLEY
No. 20338
CIVIL
REGISTERED PROFESSIONAL ENGINEER

Charles L. Rowley
6/5/97

Scale ;	1" = 30'	W. O. No.	97 – 64
Date ;	JUNE 3, 1997	Plan No.	SD– 588
Drawn By ;	JH	Folio No.	F – 1615

Charles L. Rowley & Associates
Civil Engineers & Surveyors
West Wareham, Ma.