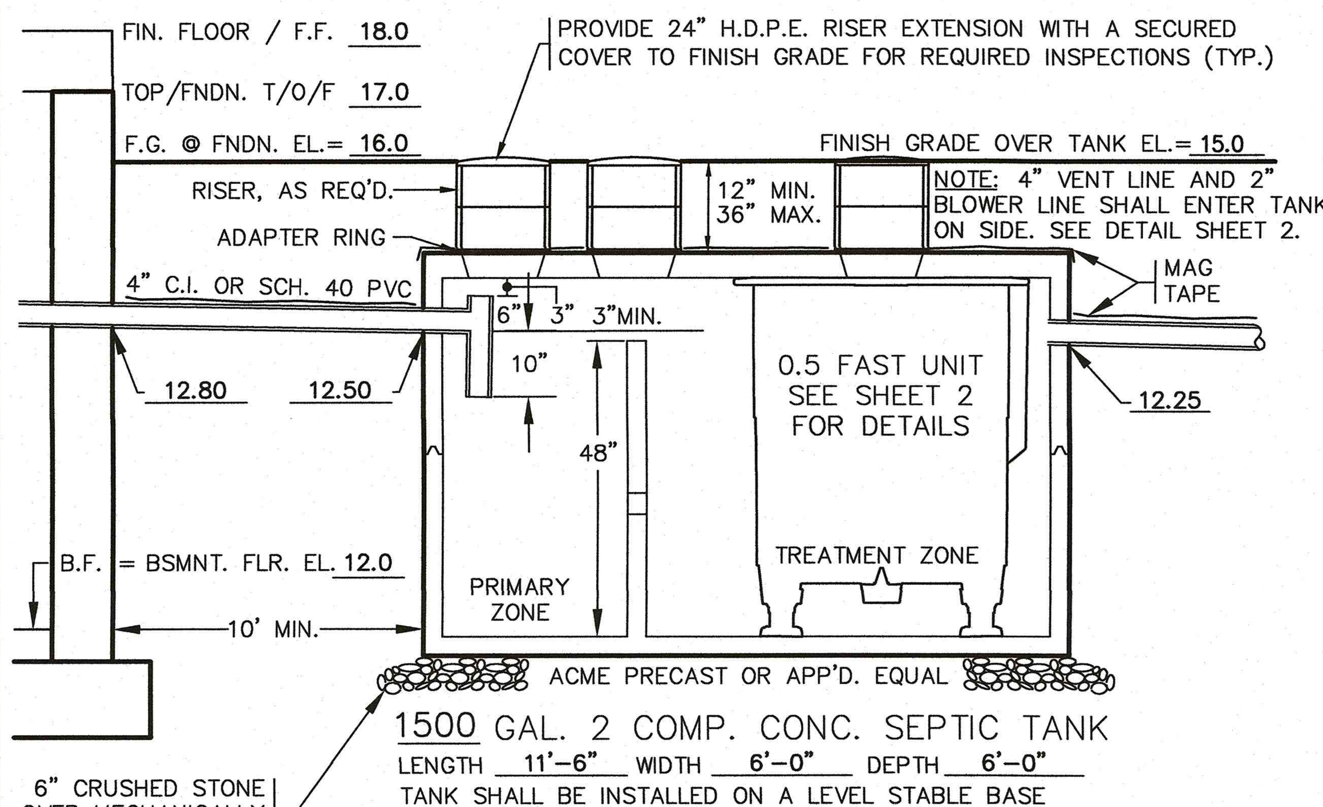

SEPTIC TANK PROFILE

N.T.S.

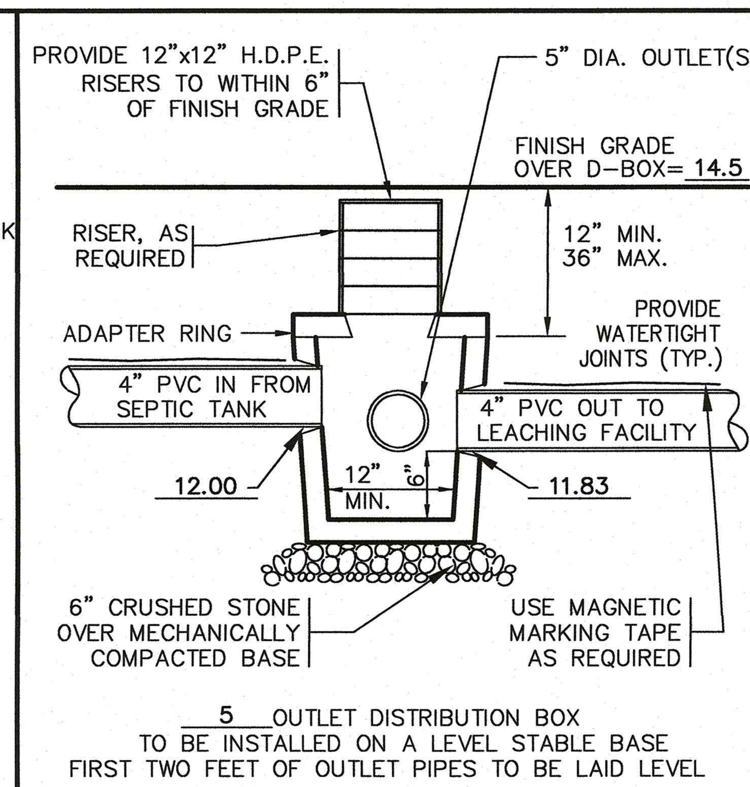

DISTRIBUTION BOX DETAIL

N.T.S.

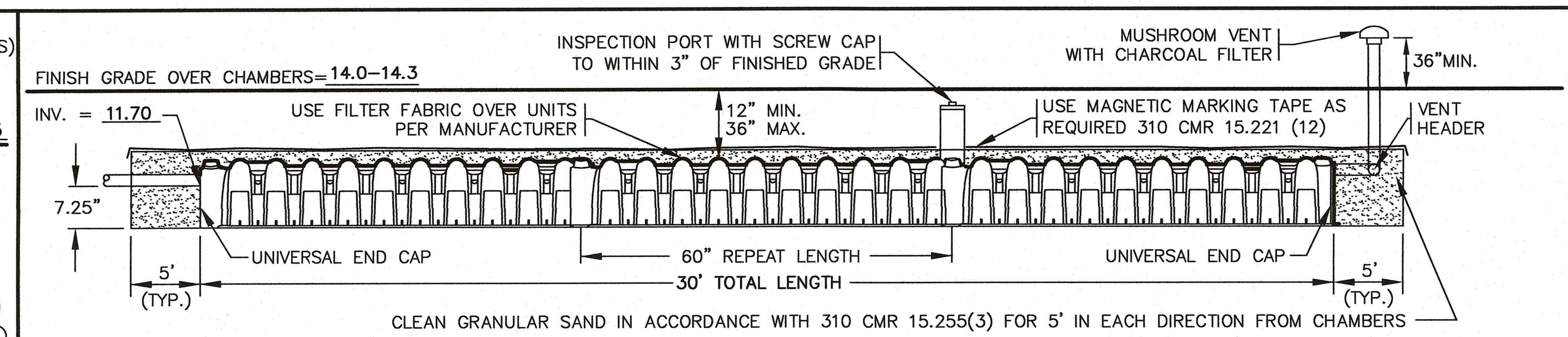

PROFILE OF ARC 36 CHAMBERS

BY ADVANCED DRAINAGE SYSTEMS INC. / N.T.S.

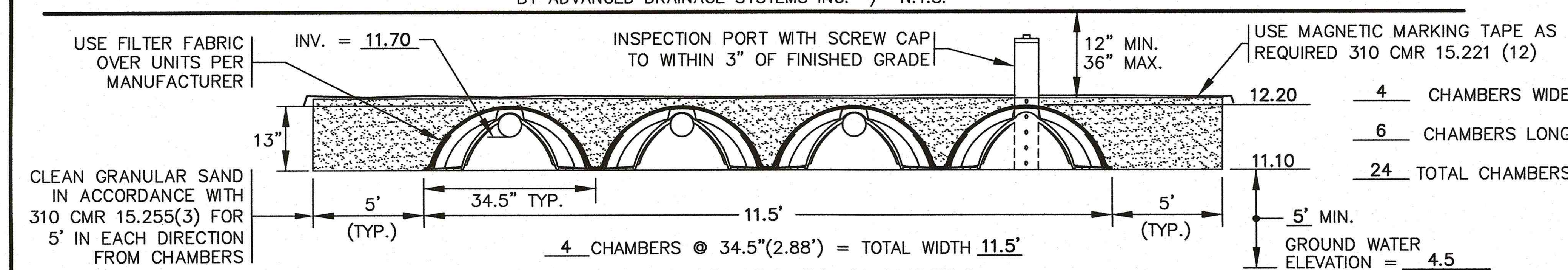

END VIEW OF ARC 36 CHAMBERS

BY ADVANCED DRAINAGE SYSTEMS INC. / N.T.S.

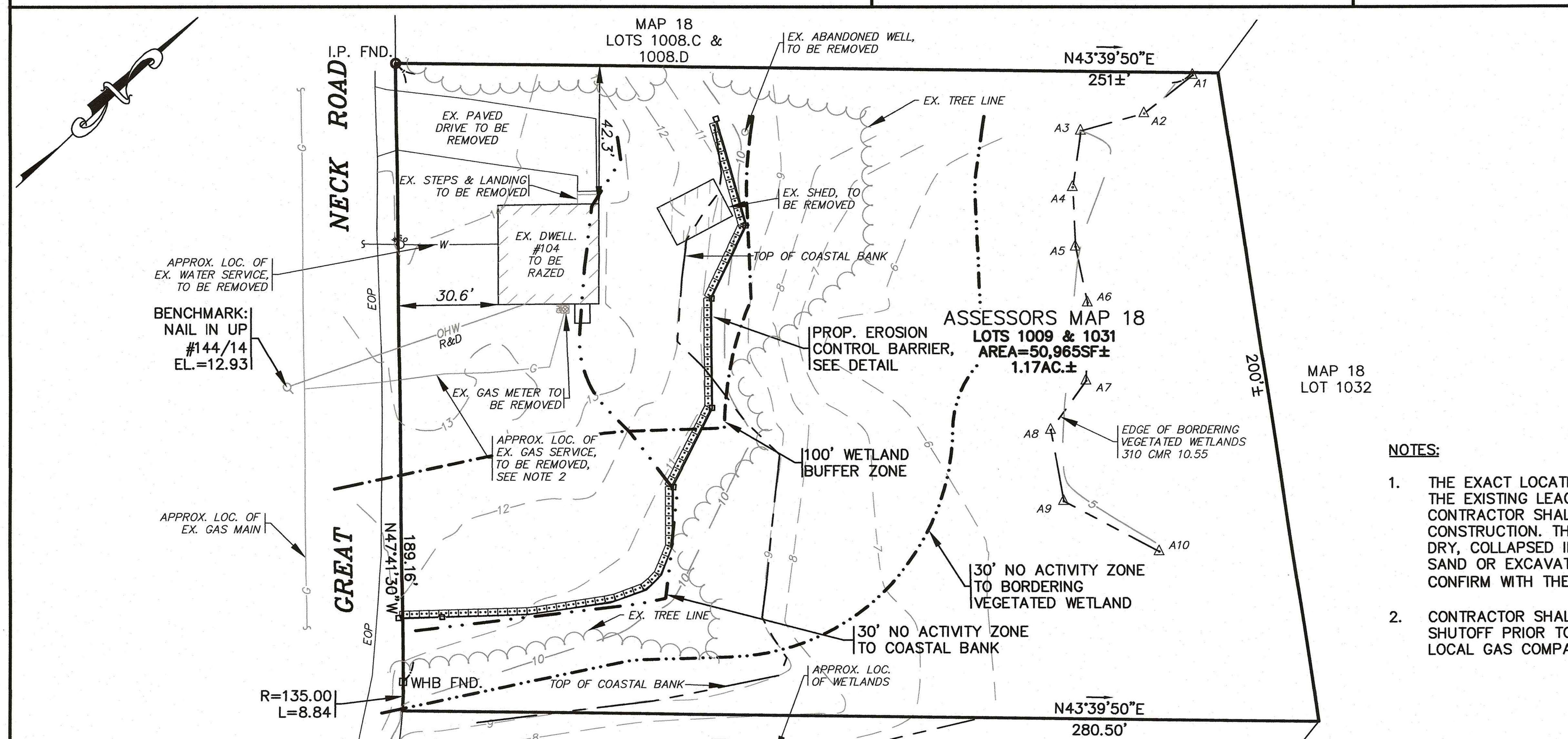

EX. CONDITIONS & DEMOLITION

SCALE: 1" = 30'

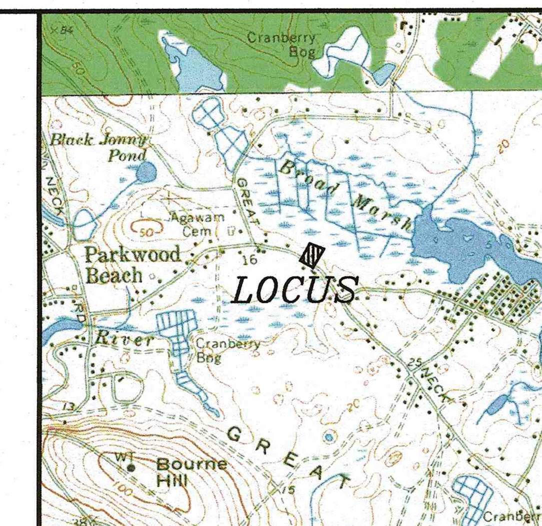

LOCUS MAP / SCALE : 1"=2000'

NOTES:

1. THE EXACT LOCATION, ELEVATION AND CONSTRUCTION OF THE EXISTING LEACHING FIELD IS UNKNOWN. THE CONTRACTOR SHALL DETERMINE THE DETAILS OF CONSTRUCTION. THE EXISTING SYSTEM SHALL BE PUMPED DRY, COLLAPSED IN PLACE AND BACKFILLED WITH CLEAN SAND OR EXCAVATED AND DISPOSED OF OFF SITE. CONFIRM WITH THE ENGINEER AT TIME OF CONSTRUCTION.
2. CONTRACTOR SHALL FIELD LOCATE EXISTING GAS SHUTOFF PRIOR TO CONSTRUCTION. COORDINATE WITH LOCAL GAS COMPANY.

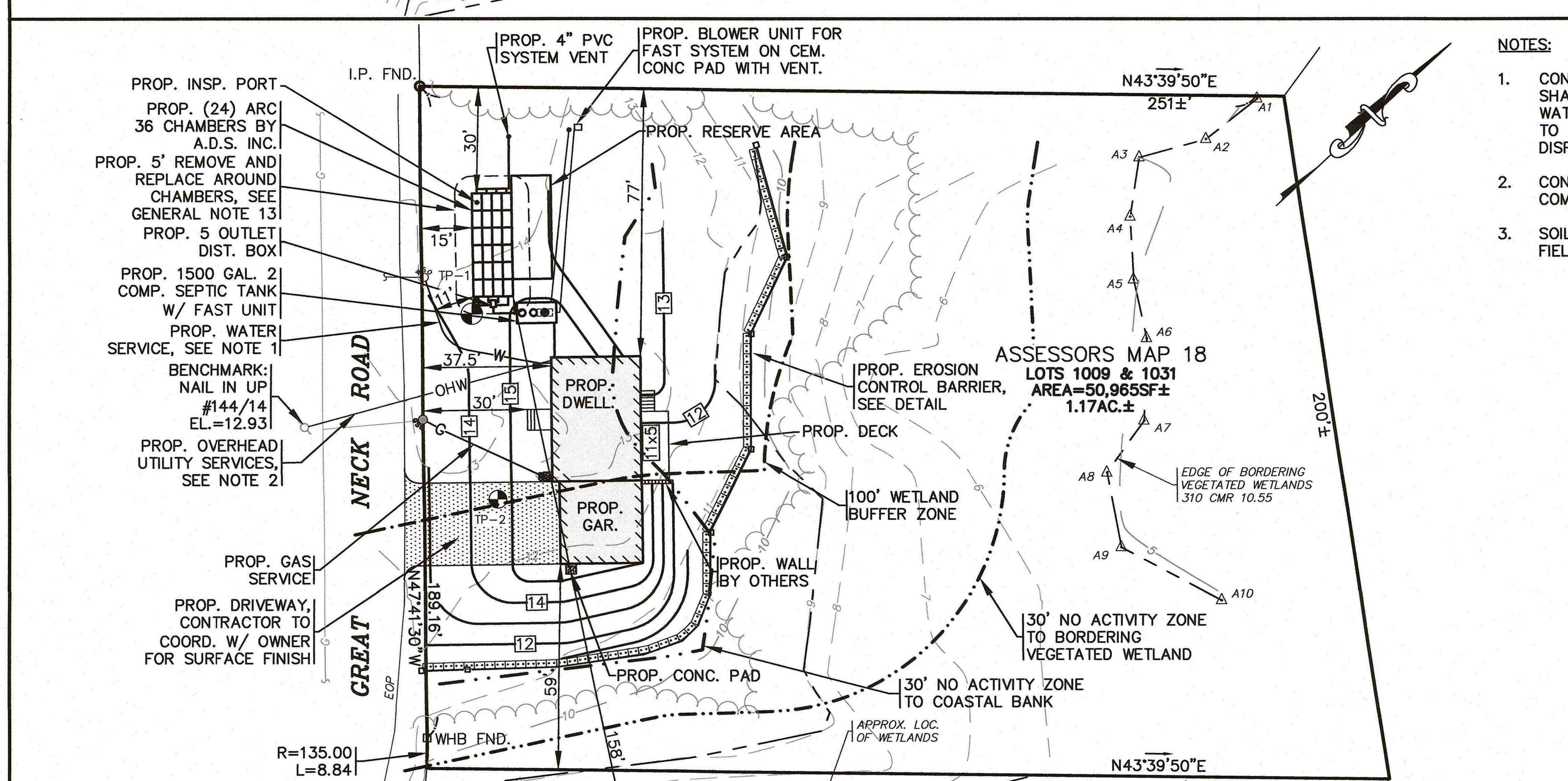

PROP. CONDITIONS

SCALE: 1" = 30'

NOTES:

1. CONNECT TO EXISTING WATER SHUTOFF. CONTRACTOR SHALL COORDINATE WITH THE TOWN OF WAREHAM WATER DEPARTMENT PRIOR TO CONNECTION. SERVICE TO BE A MINIMUM OF 10 FEET FROM THE SEWAGE DISPOSAL SYSTEM AND THE SEPTIC TANK.
2. CONTRACTOR SHALL COORDINATE WITH LOCAL UTILITY COMPANY FOR SERVICE CONNECTION LOCATION.
3. SOIL CONDITIONS IN AREA OF PROPOSED LEACHING FIELD TO BE CONFIRMED AT TIME OF CONSTRUCTION.

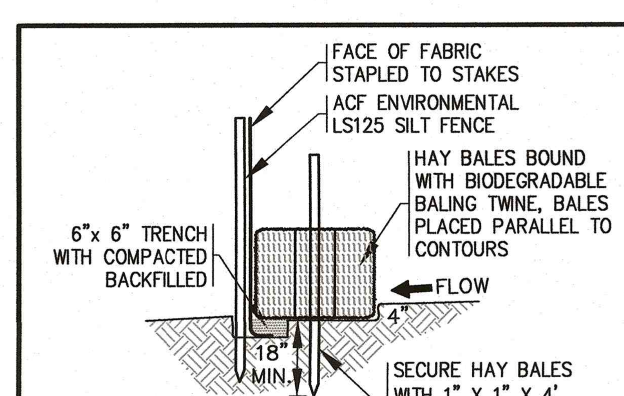

NOTES:

1. EROSION CONTROL MEASURES SHALL BE MAINTAINED UNTIL VEGETATIVE OR STABILIZED COVER HAS BEEN FIRMLY ESTABLISHED.
2. EROSION CONTROL MEASURES SHALL FOLLOW THE PERFORMANCE STANDARDS OF THE USDA SOIL CONSERVATION SERVICE, AND ANY APPLICABLE STATE/LOCAL CONSERVATION AUTHORITY.

EROSION CONTROL BARRIER DETAIL

N.T.S.

TEST PIT DATA

INSPECTOR: JOHN VIVEIROS — DATE: 4/4/19

SOIL EVALUATOR: BRIAN GRADY — CERT. #: SE923

TEST PIT #:	1	2	
ELEV TOP =	12.5	13.2	
ELEV WATER =	4.5	4.2	
PERC RATE =	2 MIN/IN	– MIN/IN	MIN/IN
DEPTH OF PERC=	30-48"	–	
TEXTURAL CLASS	I	I	

Test Pit 1:

Horizon	Depth	Description
A	0–8"	LOAMY SAND W/ ROOTS 10YR3/2
B	8"–26"	SAND W/ TRACE OF GRAVEL 10YR5/6
C	26"–108"	MED. SAND 2.5Y6/4

REMOVE & REPLACE (0–26")

WATER @ 96"

Test Pit 2:

Horizon	Depth	Description
A	0–10"	LOAMY SAND W/ ROOTS 10YR3/2
B	10"–36"	SAND W/ TRACE OF GRAVEL 10YR5/6
C	36"–108"	MED. SAND 2.5Y6/4

WATER @ 108"

DESIGN DATA

NUMBER OF BEDROOMS 3
NUMBER OF PERSONS 6
DESIGN FLOW 110 GAL/DAY/BEDROOM
TOTAL DESIGN FLOW 330 GAL/DAY

SEPTIC TANK:
330 GAL. X 200% = 660 GALS. DESIGN CAPACITY
USE 1500 GALLON SEPTIC TANK. (MIN. SIZE PER REGS)

LEACHING FIELD:
BOTTOM CAPACITY-EFFECTIVE LEACHING AREA (ELA)
24 CHAMBERS IN BED CONFIGURATION
4 ROWS OF 6 CHAMBERS
WIDTH=(4 ROWS x 2.88'W)= 11.5 FT
LENGTH=(6 CHAMBERS/ROW x 5'L)= 30 FT/ROW
30 FT/ROW x 4 ROWS= 120 FT.
120 FT x 4.80 ELA*= 576 SF
576 SF x 0.74 GPD/SF= 426 GAL.LEACHING/DAY

ELA*=EFFECTIVE LEACHING AREA-SEE DEP APPROVAL

RESERVED FOR BOARD OF HEALTH USE

GENERAL NOTES

1. UNLESS OTHERWISE NOTED, ALL SYSTEM COMPONENTS AND CONSTRUCTION METHODS SHALL BE IN ACCORDANCE WITH TITLE 5 OF THE STATE ENVIRONMENTAL CODE AND ANY APPLICABLE LOCAL RULES.
2. ANY CHANGES TO THIS PLAN MUST BE APPROVED BY THE BOARD OF HEALTH AND THE DESIGN ENGINEER.
3. 4" SCHEDULE 40 PVC PIPE WITH WATER TIGHT JOINTS SHALL BE USED IN THE DISPOSAL SYSTEM UNLESS OTHERWISE NOTED.
4. SLOPE ALL SOLID PIPE AT 1.0% MINIMUM.
5. THIS SYSTEM IS NOT DESIGNED FOR A GARBAGE DISPOSAL.
6. LOCAL BOARD OF HEALTH AND DESIGN ENGINEER TO BE NOTIFIED PRIOR TO BACKFILLING WHEN SYSTEM IS NEARLY COMPLETE AND READY FOR INSPECTION. SYSTEM IS NOT TO BE BACKFILLED WITHOUT FIRST OBTAINING APPROVAL FROM BOARD OF HEALTH AND DESIGN ENGINEER.
7. ELEVATIONS BASED ON NAVD-88
8. CONTRACTOR SHALL VERIFY ALL UTILITY LOCATIONS PRIOR TO CONSTRUCTION & REPORT ANY DISCREPANCIES TO THE DESIGN ENGINEER. ALL UNDERGROUND UTILITIES SHOWN OR NOT SHOWN WERE COMPILED ACCORDING TO AVAILABLE RECORD PLANS AND IN PART FROM DIGSAFE DELINEATIONS AND ARE APPROXIMATE ONLY. ACTUAL LOCATIONS MUST BE DETERMINED IN THE FIELD. BEFORE EXCAVATING, BLASTING, INSTALLING, BACK FILLING, GRADING, PAVING OR REPAIRING, ALL UTILITY COMPANIES, PUBLIC AND PRIVATE MUST BE CONTACTED INCLUDING THOSE IN CONTROL OF UTILITIES NOT SHOWN ON THIS PLAN. SEE MGL CHAPTER 370, ACTS OF 1963. CONTRACTORS MUST CALL DIG-SAFE. G.A.F. ENGINEERING, INC. ASSUMES NO RESPONSIBILITY FOR DAMAGES INCURRED AS A RESULT OF UTILITIES OMITTED OR INACCURATELY SHOWN.
9. NON-SHRINK GROUT TO BE USED AT ALL POINTS WHERE PIPES ENTER OR LEAVE ALL CONCRETE STRUCTURES IN ORDER TO PROVIDE WATER TIGHT SEALS.
10. ALL TANKS SHALL BE WATERTIGHT THROUGH MANUFACTURERS SPECIFICATIONS OR APPLICATION OF ASPHALT OR SYNTHETIC POLYMER SEALER.
11. ALL SEPTIC SYSTEM COMPONENTS SHALL WITHSTAND H-10 LOADING UNLESS LOCATED UNDER PAVEMENT, DRIVES OR TRAVELED WAYS IN WHICH CASE THEY SHALL WITHSTAND H-20 LOADING.
12. THE CONTRACTOR SHALL BE RESPONSIBLE FOR PAYING ALL APPLICABLE FEES AND OBTAINING ALL PERMITS, INCLUDING A TRENCH PERMIT PURSUANT TO 320 CMR 14.00 AS APPLICABLE.
13. WHERE REQUIRED, CONTRACTOR SHALL REMOVE ALL LOAM, SUBSOIL AND UNSUITABLE MATERIAL IN AREA BENEATH AND FOR 5 FT. ON ALL SIDES OF LEACHING FACILITY. REPLACE ALL UNSUITABLE MATERIAL WITH CLEAN COARSE SAND FREE FROM CLAY, FINES OR OTHER UNSUITABLE MATERIAL IN ACCORDANCE WITH 310 CMR 15.255(3).
14. CONTRACTOR SHALL NOTIFY DESIGN ENGINEER OF ANY DISCREPANCIES FOUND IN SITE CONDITIONS FROM THOSE SHOWN PRIOR TO CONTINUATION OF WORK.
15. ALL SYSTEM COMPONENTS SHALL BE MARKED WITH MAGNETIC MARKING TAPE OR A COMPARABLE MEANS IN ORDER TO LOCATE THEM ONCE BURIED.
16. ALL SOIL ABSORPTION SYSTEMS SHALL HAVE A MINIMUM OF ONE (1) INSPECTION PORT CONSISTING OF A PERFORATED FOUR(4) INCH PIPE PLACED VERTICALLY DOWN INTO THE CHAMBER TO THE NATURALLY OCCURRING SOIL OR SAND FILL BELOW THE CHAMER. THE PIPE SHALL BE CAPPED WITH A SCREW TYPE CAP AND ACCESSIBLE TO WITHIN THREE(3) INCHES OF FINISH GRADE.
17. WHERE AN EXISTING SEPTIC TANK IS TO BE ABANDONED IN PLACE, IT SHALL BE PUMPED COMPLETELY DRY AND THE BOTTOM SHALL BE RUPTURED. THE REMAINDER OF TANK SHALL BE COLLAPSED AND BACKFILLED WITH CLEAN SAND.
18. WHERE AN EXISTING SEPTIC TANK IS TO BE REMOVED FROM THE SITE, IT SHALL BE PUMPED COMPLETELY DRY PRIOR TO REMOVAL. WHERE A LEACHING AREA IS TO BE REMOVED, ALL STRUCTURES, INCLUDING DISTRIBUTION BOX, ANY PIPE, CRUSHED STONE AND ALL CONTAMINATED SOIL SHALL BE REMOVED. ALL MATERIALS SHALL BE DISPOSED OF IN ACCORDANCE WITH ALL LOCAL, STATE AND FEDERAL REGULATIONS.
19. PROPOSED PROJECT IS LOCATED WITHIN:
    ASSESSORS MAP # 18 LOT # 1009,1031
    ZONING DISTRICT RESIDENCE-60 (R-60)
    BUILDING SETBACKS F: 60 ft. S: 20 ft. R: 20 ft.
    FEMA FLOOD ZONE AE ELEVATION 14
    AS SHOWN ON COMMUNITY PANEL # 25023C0581K
20. OWNER OF RECORD: KENNETH A. DELUZE & MARK VONER
    ADDRESS: P.O. BOX 489
    SOUTH WEYMOUTH, MA
    02190

LEGEND

F.F. = 00.00	FINISHED FLOOR ELEVATION	T/O/F = 00.00	TOP OF FOUNDATION
G.F. = 00.00	GARAGE FLOOR ELEVATION	INV. = 00.00	INVERT ELEVATION
B.F. = 00.00	BASEMENT FLOOR ELEVATION	(00.00)	AS-BUILT ELEVATION
— — 100 — —	EXISTING CONTOURS	100x0	EXISTING SPOT GRADE
—[110]—	PROPOSED CONTOURS	TP	TEST PIT LOCATION
— G —	GAS LINE	— - - —	LIMITS OF WETLANDS
— E —	ELECTRIC LINE	▭	SEPTIC TANK
— W —	WATER LINE	— — —	LIMITS OF OVERDIG
———	4" SOLID SCH-40 PVC PIPE	□	DISTRIBUTION BOX
R&D	REMOVE AND DISPOSE		

REV.	DATE	BY	APP'D.	DESCRIPTION
2	6/2/20	BRG	WFM	HOUSE LOCATION
1	1/22/20	BRG	WFM	HOUSE FOOTPRINT, LOCATION

APPROVED BY: 6/3/20

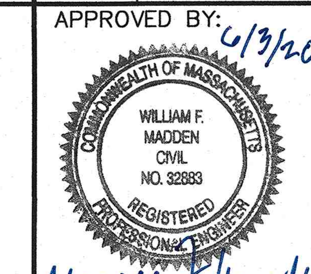

APPROVED BY:

SEWAGE DISPOSAL SYSTEM DESIGN

PREPARED FOR
KENNETH DELUZE
MAP 18 / LOTS 1009, 1031
104 GREAT NECK ROAD
WAREHAM, MA

G.A.F. ENGINEERING, INC.
PROFESSIONAL ENGINEERS & LAND SURVEYORS
266 MAIN STREET, WAREHAM, MA 02571
TEL: (508) 295-6600 FAX: (508) 295-6634
E-MAIL: gaf@gaf-eng.com

COPYRIGHT © 2019 G.A.F. ENGINEERING, INC. NO PART OF THIS DOCUMENT MAY BE REPRODUCED, STORED, OR TRANSMITTED BY ANY MEANS, ELECTRONIC AND/OR MECHANICAL PHOTOCOPYING, WHATSOEVER, WITHOUT THE EXPRESS WRITTEN CONSENT OF G.A.F. ENGINEERING, INC. WITH THE EXCEPTION OF ANY REGULATORY AUTHORITY WHICH MAY REPRODUCE IT IN CONJUNCTION WITH THE PERFORMANCE OF OFFICIAL BUSINESS UNDER ITS JURISDICTION. ANY MODIFICATIONS MADE TO THIS DOCUMENT WITHOUT THE EXPRESS WRITTEN CONSENT OF G.A.F. ENGINEERING, INC. SHALL RENDER IT UNUSEABLE.

DWG NO.: SD-1	SCALE: AS NOTED	DATE: DEC. 26, 2019
DRN BY: JMP	CHK BY: WFM	JOB No. 19-9301

H:\GAF DRAWINGS\2019 DRAWINGS\19-9301-N (DELUZE)\9301\dwg\9301_ALT-2.dwg