TOWN OF WAREHAM
AIR CONDITIONING PROJECT
WAREHAM TOWN HALL

COMMONWEALTH OF MASSACHUSETTS
EXECUTIVE OFFICE OF COMMUNITIES AND DEVELOPMENT

TOWN OF WAREHAM

54 MARION ROAD,
WAREHAM, MA 02571

SITE

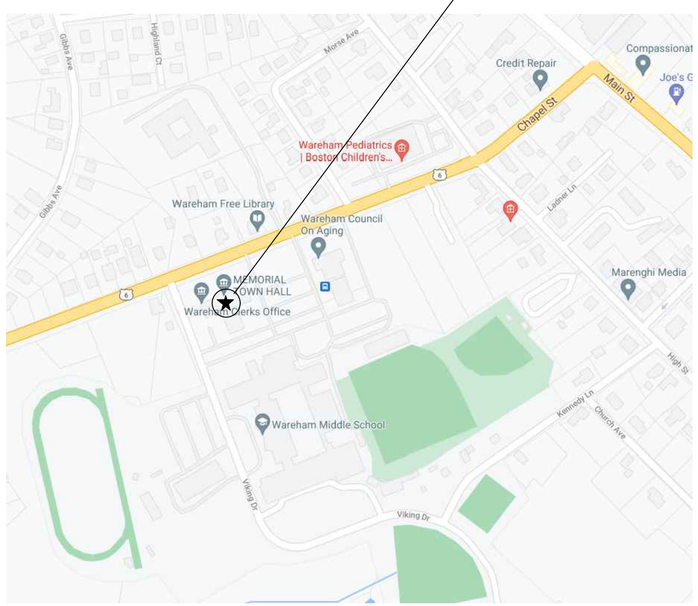

WAREHAM TOWN HALL - LOCUS PLAN
54 MARION ROAD, WAREHAM, MA

STRUCTURAL ENGINEER

THE DEMPSEY GROUP, INC.
PO BOX 927
SOUTH HARWICH, MA 02661
TELEPHONE NO. (508) 326-5498

MECHANICAL/PLUMBING ENGINEER

C.A. CROWLEY ENGINEERING, INC.
645 COUNTY STREET, UNIT 6
TAUNTON, MA 02780
TELEPHONE NO. (508) 884-5094

ELECTRICAL ENGINEER

NANGLE ENGINEERING, INC.
32 PRINCE STREET,
DANVERS, MA 01923
TELEPHONE NO. (978) 777-7650

JULY 21, 2021

LIST OF DRAWINGS

T-1 TITLE SHEET

STRUCTURAL

S-1 STRUCTURAL - ROOF FRAMING PLAN & GENERAL NOTES

S-2 STRUCTURAL - SECTIONS AND DETAILS

PLUMBING/MECHANICAL

P-1 PLUMBING - GAS PIPING PLAN

M-1 MECHANICAL - FIRST FLOOR NEW WORK PLAN

M-2 MECHANICAL - SECOND FLOOR NEW WORK PLAN

M-3 MECHANICAL - THIRD FLOOR NEW WORK PLAN

M-4 MECHANICAL - ATTIC/ROOF NEW WORK PLAN

M-5 MECHANICAL - LEGEND & SCHEDULES

M-6 MECHANICAL - DETAILS

ELECTRICAL

E-1 ELECTRICAL - LEGEND, SCHEDULES AND DETAILS

E-2 ELECTRICAL - FIRST FLOOR NEW WORK PLAN

E-3 ELECTRICAL - SECOND FLOOR NEW WORK PLAN

E-4 ELECTRICAL - THIRD FLOOR NEW WORK PLAN

E-5 MECHANICAL - ATTIC/ROOF NEW WORK PLAN

T-1

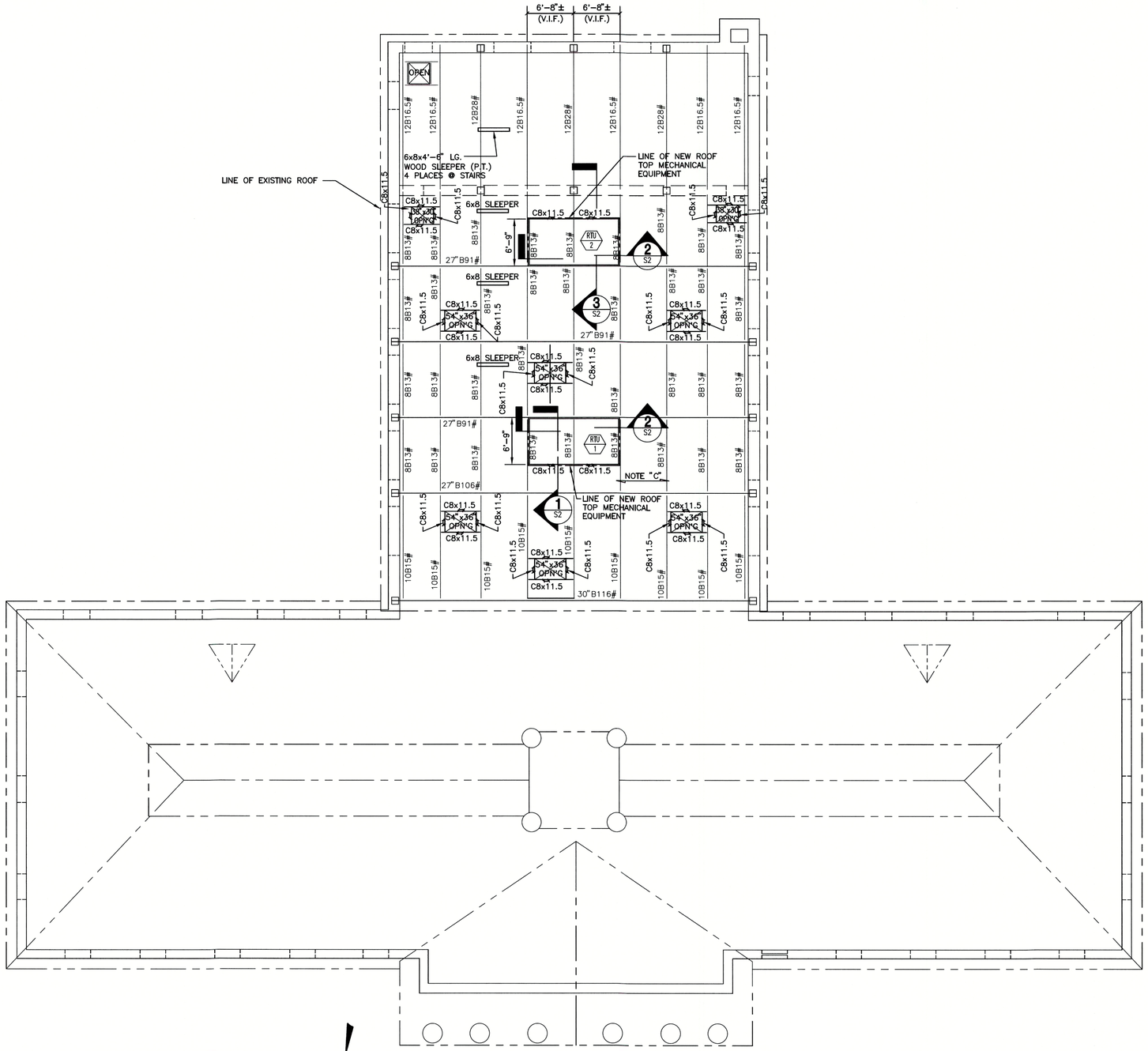

NOTE "C"
EXISTING ROOF CONSTRUCTION
1 ¾" x 7" TONGUE & GROOVE WOOD PLANK
ON PLAN
INDICATES DIRECTION OF SPAN

NORTH

8' 4' 0 4' 8' 16'
SCALE: 1/8" = 1'-0"

EXISTING ROOF FRAMING PLAN

SCALE: 1/8" = 1'-0"

NOTES:

1. FIELD VERIFY DIMENSIONAL LOCATIONS AND SIZES OF ALL EXISTING FRAMING IN AREAS OF NEW ROOF TOP EQUIPMENT AND NEW FRAMING.
2. WEIGHT OF ROOF TOP UNITS RTU-1 & RTU-2 EQUALS 3,474# EACH. (500# ALLOWED FOR CURB)
3. REFER TO DRAWING S2 FOR TYPICAL ROOF OPENING DETAIL.
4. REFER TO DRAWING S2 FOR TYPICAL WOOD SLEEPER DETAIL.
5. VERIFY ALL DIMENSIONS OF ROOF TOP UNITS WITH FINAL EQUIPMENT PURCHASED.

GENERAL NOTES

1. CONTRACTOR SHALL VERIFY ALL CONDITIONS IN THE FIELD AND SHALL TAKE ALL NECESSARY FIELD MEASUREMENTS.
2. CODE
   INTERNATIONAL BUILDING CODE 2015 AND MASSACHUSETTS AMENDMENTS, NINTH EDITION.
3. LOADS

   ROOF: GROUND SNOW LOAD, Pg = 30psf
   MINIMUM FLAT ROOF SNOW Pf = 30psf

   WIND: V=138, EXPOSURE B IN ACCORDANCE W/SECTION 1611.0 OF THE ABOVE REFERENCED CODE
   RISK CATEGORY II

4. SEISMIC

   SEISMIC IMPORTANCE FACTOR, Is = 1.00
   OCCUPANCY CATEGORY II
   SEISMIC DESIGN FACTORS:
   SITE SOIL CLASSIFICATION – SITE CLASS "D" – "STIFF SOIL"
   Ss = 0.173g *Sms = 0.272g *Sds = 0.181g
   S1 = 0.059g *Sm1 = 0.139g *Sd1 = 0.093g.
   * SITE COEFFICIENTS, Fa = 1.60 & Fv = 2.40
   SEISMIC DESIGN CATEGORY = "B"
   * RESPONSE MODIFICATION COEFFICIENTS R = 3.00
   * OVER STRENGTH FACTOR Ωo = 2.0
   * DEFLECTION AMPLIFICATION FACTOR Cd = 2.5
   * Cs = 0.060
   W TOTAL = 3.4 KIPS
   * BASE SHEAR = 200 LBS
   * INFORMATION PROVIDED FOR EQUIPMENT DESIGN.

STRUCTURAL STEEL

1. STRUCTURAL STEEL WORK SHALL CONFORM TO THE LATEST EDITION OF "THE SPECIFICATIONS FOR THE DESIGN, FABRICATION AND ERECTION OF STRUCTURAL STEEL FOR BUILDINGS" OF THE AMERICAN INSTITUTE OF STEEL CONSTRUCTION AS REVISED TO DATE. STEEL SHALL BE ASTM A-992.
2. WELDING AND PREPARATION OF SURFACES FOR WELDING SHALL BE DONE IN STRICT ACCORDANCE WITH THE REQUIREMENTS OF "THE AMERICAN WELDING SOCIETY CODE FOR ARC AND GAS WELDING FOR BUILDING CONSTRUCTION," AS REVISED TO DATE. WELDING ELECTRODES SHALL BE LOW HYDROGEN TYPE AND CONFORM TO AWS E70XX SERIES.
3. FRAMING CONNECTOR CLIP ANGLES SHALL BE FIELD WELDED TO EXISTING STEEL FRAMING AND BOLTED TO NEW FRAMING USING TWO 3/4" A325-N BOLTS IN SHORT SLOTTED HOLES.
4. PAINT ONE SHOP COAT AND TOUCHUP IN THE FIELD ALL STRUCTURAL STEEL WITH ZINC RICH PRIMER AS FOLLOWS:
   A. ALL PRIMER EXCEPT AS SPECIFICALLY NOTED OTHERWISE: TNEMEC – ZINC 90-97 URETHANE ORGANIC ZINC RICH PRIMER, OR AN APPROVED EQUAL.
   B. STEEL SHALL BE UNPAINTED WHERE TO BE FIELD WELDED.

STRUCTURAL TESTING AND INSPECTION

1. ALL TESTS TO BE MADE BY APPROVED LABORATORIES UNDER THE SUPERVISION OF PROFESSIONAL ENGINEERS LICENSED IN THE STATE WHERE BUILDING IS CONSTRUCTED. OWNER SHALL OBTAIN AND PAY FOR TESTS AND INSPECTIONS AS CALLED FOR HEREUNDER.
   A. STRUCTURAL WELDS – 100% VISUAL INSPECTION.
2. CONTRACTOR SHALL PROVIDE THE STRUCTURAL ENGINEER WITH 2 WORKING DAYS NOTICE TO ENABLE THE STRUCTURAL ENGINEER TO EXAMINE THE WORK PERFORMED.
3. CONTRACTOR SHALL COORDINATE TEST SCHEDULING WITH OWNER PRIOR TO COMMENCEMENT OF ANY CONSTRUCTION.

MISCELLANEOUS

1. VERIFY IN FIELD ALL LOCATIONS AND CONDITIONS IN THE STRUCTURE SHOWN ON THE DRAWINGS AND/OR AFFECTING THE INSTALLATION OF NEW WORK. ANY DISCREPANCIES SHALL BE BROUGHT TO THE ATTENTION OF THE ENGINEER BEFORE FABRICATION OF DEPENDENT WORK.
2. ALL STRUCTURAL DRAWINGS SHALL BE USED IN CONJUNCTION WITH ARCHITECTURAL, MECHANICAL AND ELECTRICAL DRAWINGS, SPECIFICATIONS AND MANUFACTURERS DRAWINGS FOR EQUIPMENT.
3. SHOP DRAWINGS FOR THE FOLLOWING ITEMS SHALL BE PREPARED BY THE MANUFACTURERS AND APPROVED BY THE ENGINEER BEFORE FABRICATION OF STRUCTURAL STEEL.
4. ALL OPENINGS, SLEEVES, SLOTS, ETC. NOT SPECIFICALLY DETAILED ON THE STRUCTURAL DRAWINGS MUST BE APPROVED IN THE FIELD BY THE ENGINEER'S REPRESENTATIVE. HOLES LARGER THAN 8" SHALL NOT BE FORMED OR CUT IN ANY BEARING WALL UNLESS THE EXACT SIZE, LOCATIONS, AND FRAME DETAILS HAVE BEEN SUBMITTED IN WRITING TO THE ENGINEER AND APPROVED BY THE ENGINEER.
5. IT IS THE RESPONSIBILITY OF THE CONTRACTOR TO PROVIDE ADEQUATE SHORING AND BRACING TO SAFELY SUPPORT THE BUILDING DURING CONSTRUCTION. ANY APPROVAL BY THE ENGINEER WILL NOT RELIEVE THE CONTRACTOR OF FULL RESPONSIBILITY, FOR SHORING AND/OR BRACING.
6. DURING THE CONSTRUCTION PHASE OF THE PROJECT THE CONTRACTOR SHALL REVIEW DESIGN LOADS TO LIMIT AND CONTROL CONSTRUCTION LOADING, INCLUDING BUT NOT LIMITED TO MATERIAL STOCK PILING AND CONSTRUCTION EQUIPMENT.
7. THE CONTRACTOR AND SUBCONTRACTORS SHALL REVIEW ALL ADDITIONAL DRAWINGS FOR ROOF OPENINGS AND OTHER SPECIFIC ITEMS NOT CALLED OUT FOR ON THE STRUCTURAL DRAWING. SPECIFIC ATTENTION TO THE ARCHITECTURAL AND MECHANICAL PLANS IS REQUIRED TO COVER ALL ITEMS IN BIDDING.

WOOD FRAMING NOTES:

1. FRAMING LUMBER SHALL CONFORM TO THE LATEST EDITION OF THE AFPA "NATIONAL DESIGN SPECIFICATION FOR WOOD CONSTRUCTION", AND SUPPLEMENT "DESIGN VALUES FOR WOOD CONSTRUCTION", LATEST EDITION. MAXIMUM MOISTURE CONTENT SHALL BE 19%.
2. PRESSURE TREATED WOOD MEMBERS USED FOR PLACEMENT AGAINST CONCRETE OR MASONRY (SILLS, PLATES, ETC.) SHALL BE PRESSURE WITH ACQ PRESERVATIVE, OR APPROVED EQUAL, TO MINIMUM RETENTION OF 0.6 PCF IN ACCORDANCE WITH AWPA C3.
3. CONNECTORS, CONNECTIONS, FASTENERS, ETC. USED TO SECURE ACQ PRESSURE TREATED LUMBER SHALL BE STAINLESS STEEL.
4. LUMBER WHICH IS SPLIT, CRACKED, NOTCHED OR OTHERWISE ALTERED OR DAMAGED SHALL BE IMMEDIATELY REJECTED AND NOT ALLOWED FOR USE, UNLESS OTHERWISE APPROVED IN WRITING BY THE STRUCTURAL ENGINEER.
5. DETAILS OF WOOD FRAMING SUCH AS NAILING, BLOCKING, BRIDGING, FIRESTOPPING, ETC. SHALL CONFORM TO THE LATEST EDITION OF THE NATIONAL DESIGN SPECIFICATION (AFPA).
6. WOOD PRODUCTS SHALL BE STORED IN A DRY LOCATION.
7. MAKE ALL BEARINGS FULL. FINISH ALL BEARING SURFACES ON WHICH STRUCTURAL MEMBERS ARE TO REST SO AS TO GIVE SURE AND EVEN SUPPORT. WHERE FRAMING MEMBERS SLOPE, CUT OR NOTCH THE ENDS AS REQUIRED TO GIVE UNIFORM BEARING SURFACE.

THE DEMPSEY GROUP, INC.
PO BOX 927
SOUTH HARWICH, MA 02661
TEL. (508) 326-5498 EMAIL: tdgstructural@comcast.net

REVISION DATES

TOWN OF WAREHAM
TOWN HALL
AIR CONDITIONING PROJECT

STRUCTURAL - ROOF FRAMING PLAN AND GENERAL NOTES

STAMP: DAVID R. YOUNG STRUCTURAL No. 32360 REGISTERED PROFESSIONAL ENGINEER
14 July 2021

DATE:	07/21/2021
SCALE:	AS SHOWN
DRAWN BY:	JD
CHECKED BY:	DY
PROJECT NO.	21013.00

c.a. crowley. ENGINEERING, INC.
645 County Street . Suite 6
Taunton, MA 02780
tel . (508) 884.5094 WWW.CROWLEYENG.COM fax . (508) 884.5099

DRAWING NUMBER
S-1

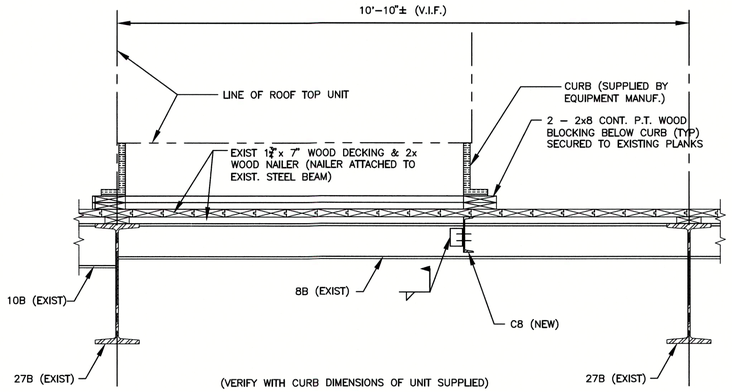

1 / S1 SECTION
SCALE: 3/4" = 1'-0"

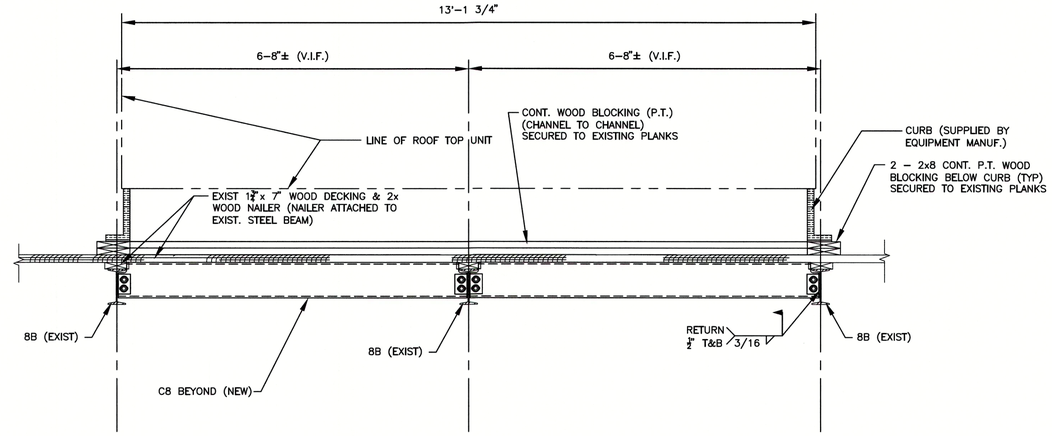

2 / S1 SECTION
SCALE: 3/4" = 1'-0"

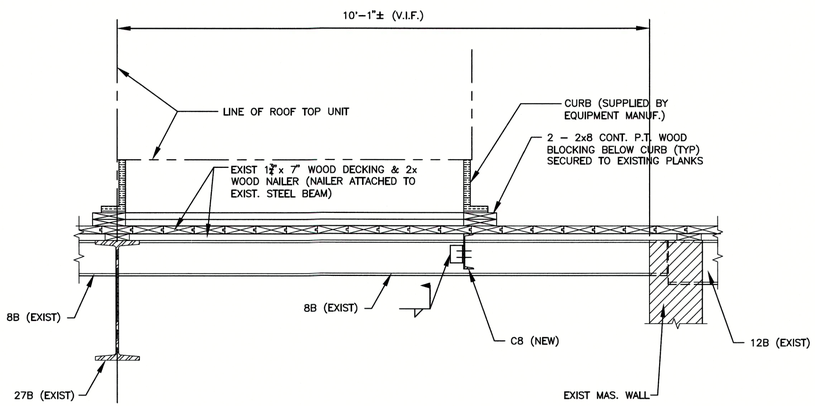

3 / S1 SECTION
SCALE: 3/4" = 1'-0"

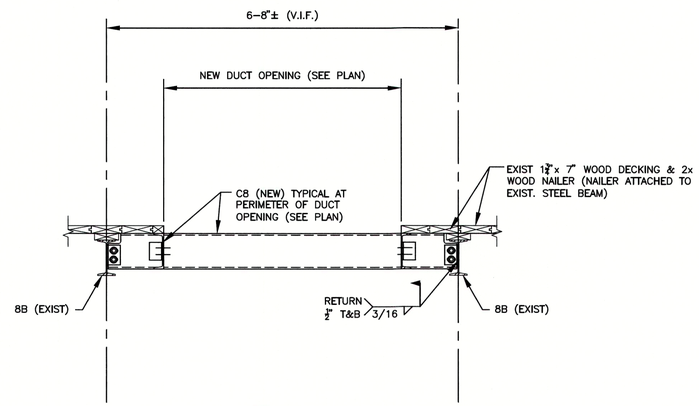

TYPICAL ROOF OPENING DETAIL
SCALE: N.T.S.

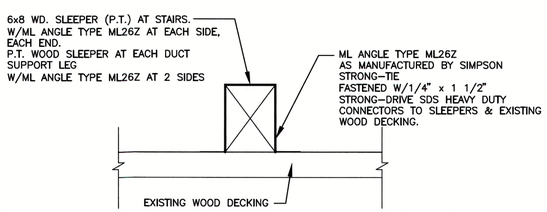

TYPICAL WOOD SLEEPER DETAIL
SCALE: NONE

THE DEMPSEY GROUP, INC.
PO BOX 927
SOUTH HARWICH, MA 02661
TEL. (508) 326-5498 EMAIL: tdgstructural@comcast.net

REVISION DATES	
DATE:	07/21/2021
SCALE:	AS SHOWN
DRAWN BY:	JD
CHECKED BY:	DY
PROJECT NO.	21013.00

TOWN OF WAREHAM
TOWN HALL
AIR CONDITIONING PROJECT

STRUCTURAL - SECTIONS & DETAILS

c.a. crowley. ENGINEERING, INC.
645 County Street . Suite 6
Taunton, MA 02780
tel . (508) 884.5094 WWW.CROWLEYENG.COM fax . (508) 884.5099

STAMP: DAVID R. YOUNG STRUCTURAL No. 32,000 REGISTERED PROFESSIONAL ENGINEER COMMONWEALTH OF MASSACHUSETTS
14 JULY 2021

DRAWING NUMBER
S-2

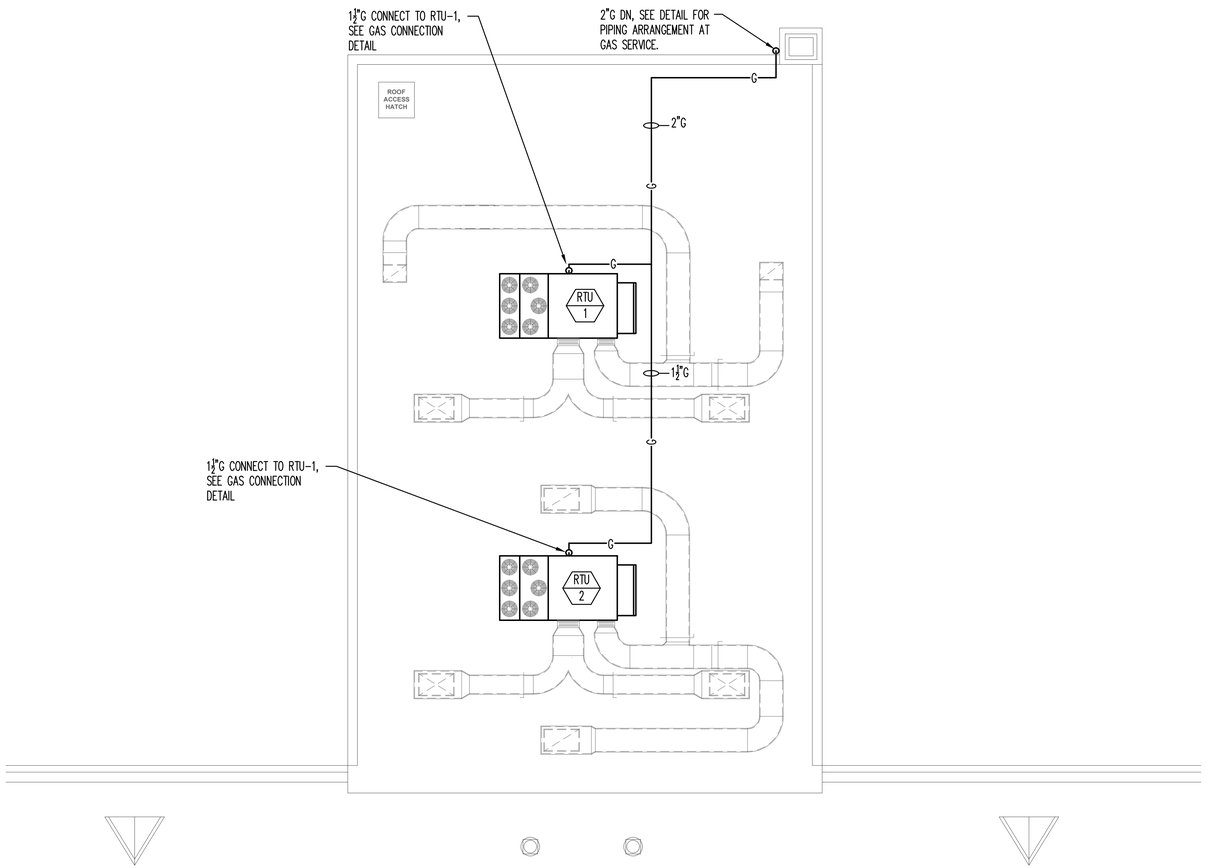

NEW WORK PLAN - PLUMBING - ROOF

SCALE: 1/8" = 1'-0"

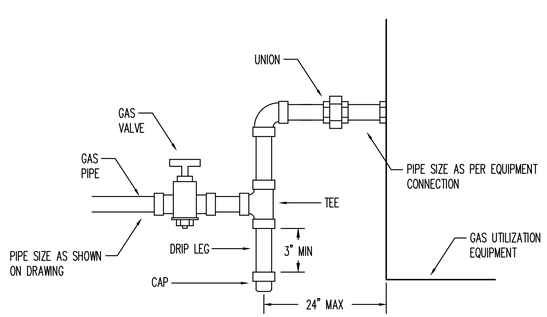

GAS CONNECTION DETAIL

NO SCALE

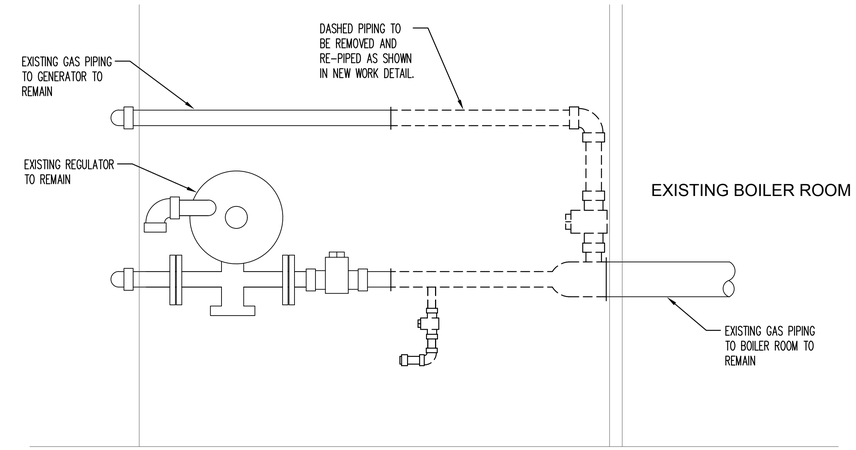

GAS PIPING DEMOLITION DETAIL

NO SCALE

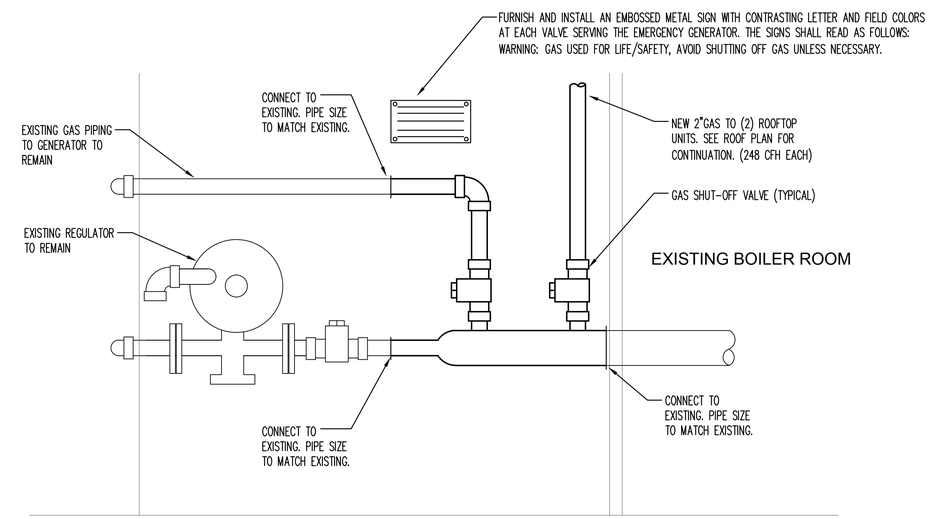

GAS PIPING NEW WORK DETAIL

NO SCALE

REVISION DATES	TOWN OF WAREHAM TOWN HALL AIR CONDITIONING PROJECT	STAMP
	PLUMBING - GAS PIPING PLAN	
DATE: 07/21/2021 SCALE: AS SHOWN DRAWN BY: CH CHECKED BY: RV PROJECT NO. 21013.00	c.a. crowley. ENGINEERING, INC. 645 County Street . Suite 6 Taunton, MA 02780 tel . (508) 884.5094 WWW.CROWLEYENG.COM fax . (508) 884.5099	DRAWING NUMBER P-1

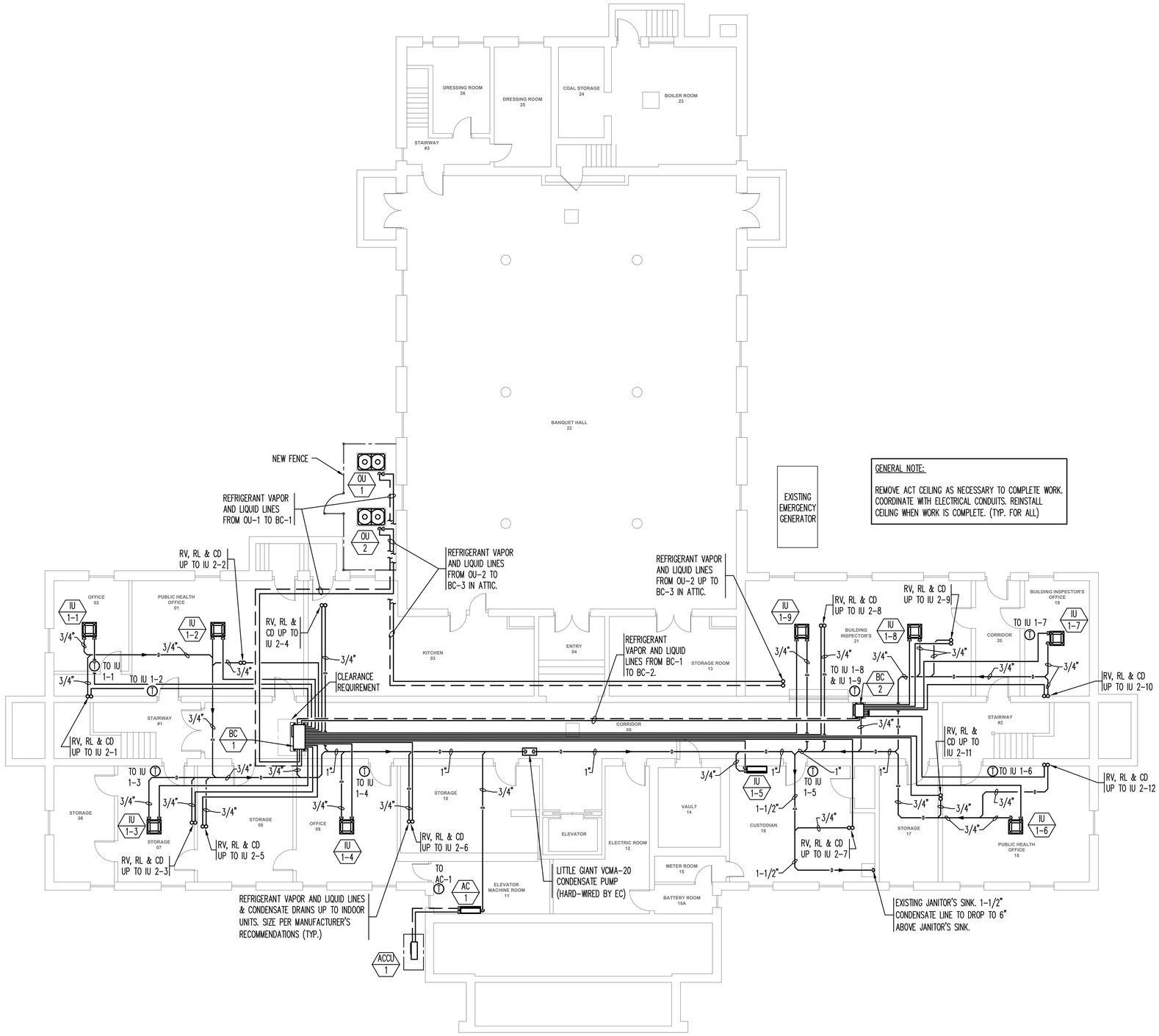

GENERAL NOTE:

REMOVE ACT CEILING AS NECESSARY TO COMPLETE WORK. COORDINATE WITH ELECTRICAL CONDUITS. REINSTALL CEILING WHEN WORK IS COMPLETE. (TYP. FOR ALL)

NEW WORK PLAN - FIRST FLOOR

SCALE: 1/8" = 1'-0"

REVISION DATES	TOWN OF WAREHAM TOWN HALL AIR CONDITIONING PROJECT	STAMP
	MECHANICAL - FIRST FLOOR NEW WORK PLAN	
DATE: 07/21/2021 SCALE: AS SHOWN DRAWN BY: FV CHECKED BY: MHV PROJECT NO. 21013.00	c.a. crowley. ENGINEERING, INC. 645 County Street . Suite 6 Taunton, MA 02780 tel . (508) 884.5094 WWW.CROWLEYENG.COM fax . (508) 884.5099	DRAWING NUMBER M-1

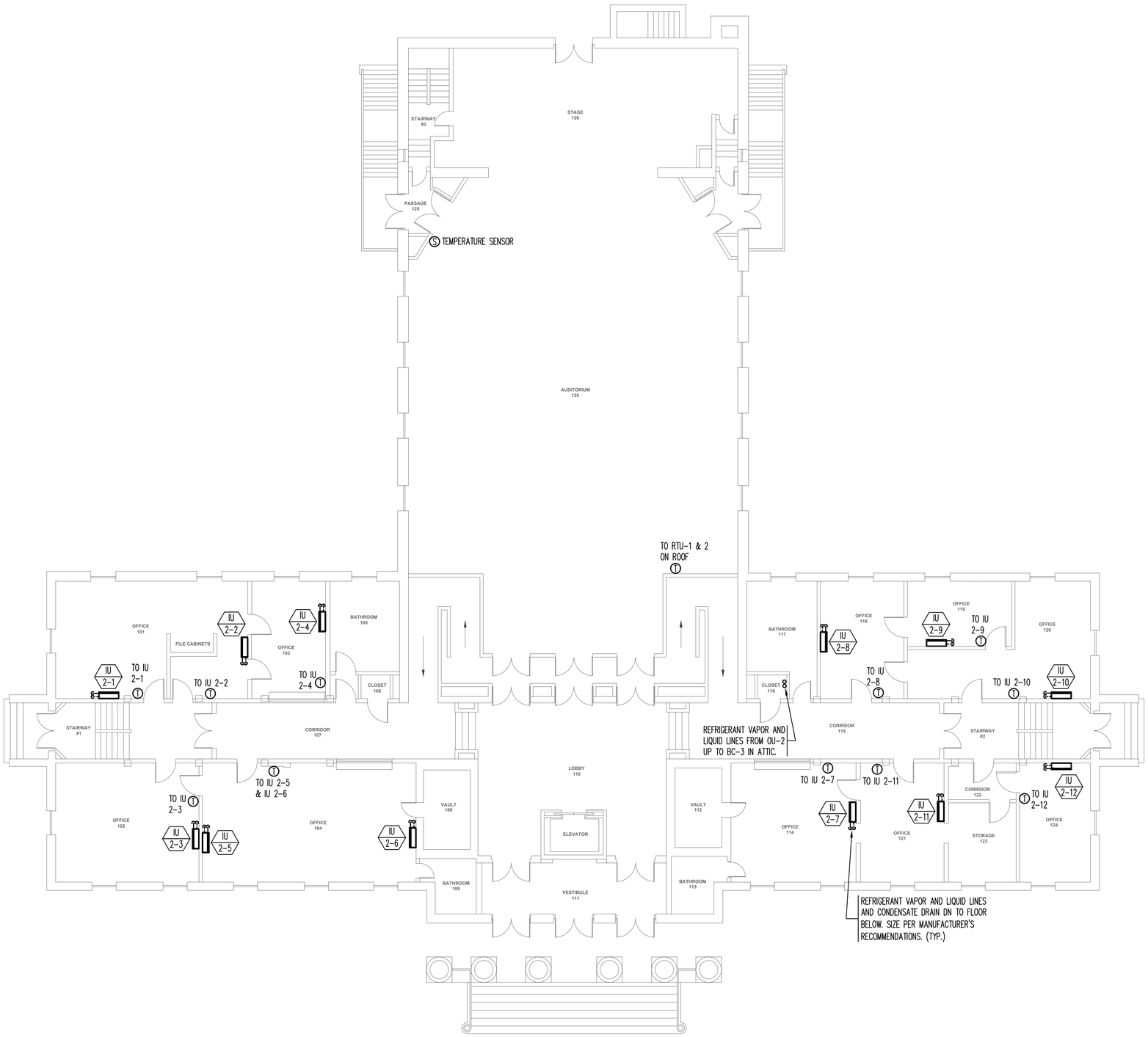

NEW WORK PLAN - SECOND FLOOR

SCALE: 1/8" = 1'-0"

REVISION DATES	TOWN OF WAREHAM TOWN HALL AIR CONDITIONING PROJECT	STAMP
	MECHANICAL - SECOND FLOOR NEW WORK PLAN	
DATE: 07/21/2021 SCALE: AS SHOWN DRAWN BY: FV CHECKED BY: MHV PROJECT NO. 21013.00	c.a. crowley. ENGINEERING, INC. 645 County Street . Suite 6 Taunton, MA 02780 tel . (508) 884.5094 WWW.CROWLEYENG.COM fax . (508) 884.5099	DRAWING NUMBER M-2

DEMOLITION KEYNOTES:

① EXISTING FAN, DUCTWORK, CONTROLS AND ASSOCIATED ACCESSORIES SHALL BE REMOVED IN THEIR ENTIRETY. EXISTING LOUVERS SHALL BE SEALED AIR AND WATER TIGHT WITH MINIMUM R-20 WALL BOARD.

② REMOVE EXISTING SUPPLY GRILLE WITH NO DAMAGE AND STORE FOR REINSTALLATION FOR ACCESS TO THE EXISTING FAN. REINSTALL EXISTING SUPPLY GRILLE WHEN DEMOLITION WORK IS COMPLETE.

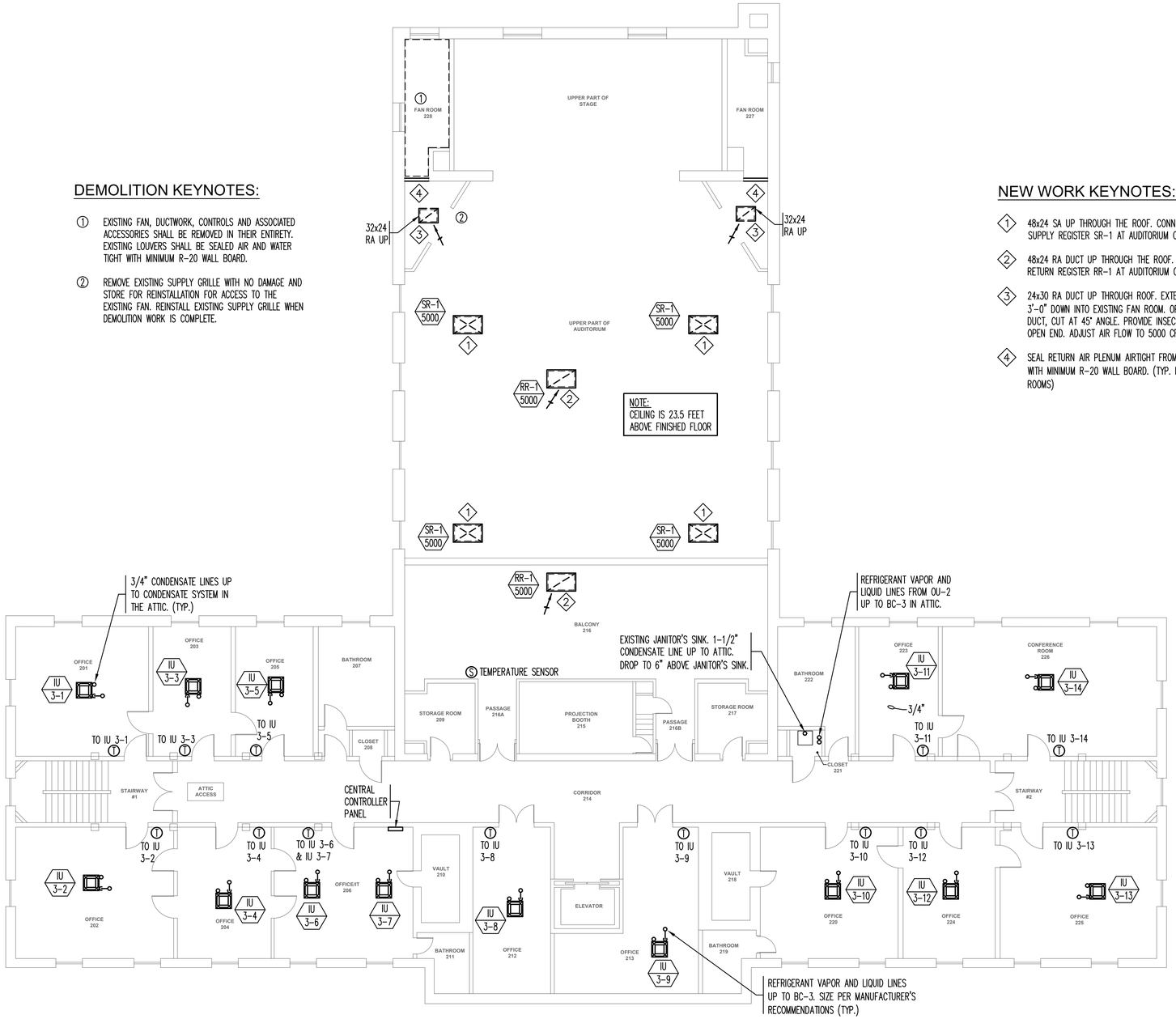

NEW WORK PLAN - THIRD FLOOR

SCALE: 1/8" = 1'-0"

NEW WORK KEYNOTES:

1. 48x24 SA UP THROUGH THE ROOF. CONNECT TO SUPPLY REGISTER SR-1 AT AUDITORIUM CEILING.
2. 48x24 RA DUCT UP THROUGH THE ROOF. CONNECT TO RETURN REGISTER RR-1 AT AUDITORIUM CEILING.
3. 24x30 RA DUCT UP THROUGH ROOF. EXTEND DUCT 3'-0" DOWN INTO EXISTING FAN ROOM. OPEN-ENDED DUCT, CUT AT 45° ANGLE. PROVIDE INSECT SCREEN ON OPEN END. ADJUST AIR FLOW TO 5000 CFM.
4. SEAL RETURN AIR PLENUM AIRTIGHT FROM FAN ROOM WITH MINIMUM R-20 WALL BOARD. (TYP. FOR 2 FAN ROOMS)

REVISION DATES	TOWN OF WAREHAM TOWN HALL AIR CONDITIONING PROJECT	STAMP
	MECHANICAL - THIRD FLOOR NEW WORK PLAN	
DATE: 07/21/2021 SCALE: AS SHOWN DRAWN BY: FV CHECKED BY: MHV PROJECT NO. 21013.00	c.a. crowley. ENGINEERING, INC. 645 County Street . Suite 6 Taunton, MA 02780 tel . (508) 884.5094 WWW.CROWLEYENG.COM fax . (508) 884.5099	DRAWING NUMBER M-3

NOTE: ALL ROOF PENETRATIONS SHALL BE COMPLETED BY A SARNAFILL CERTIFIED CONTRACTOR TO MAINTAIN THE EXISTING ROOF WARRANTY.

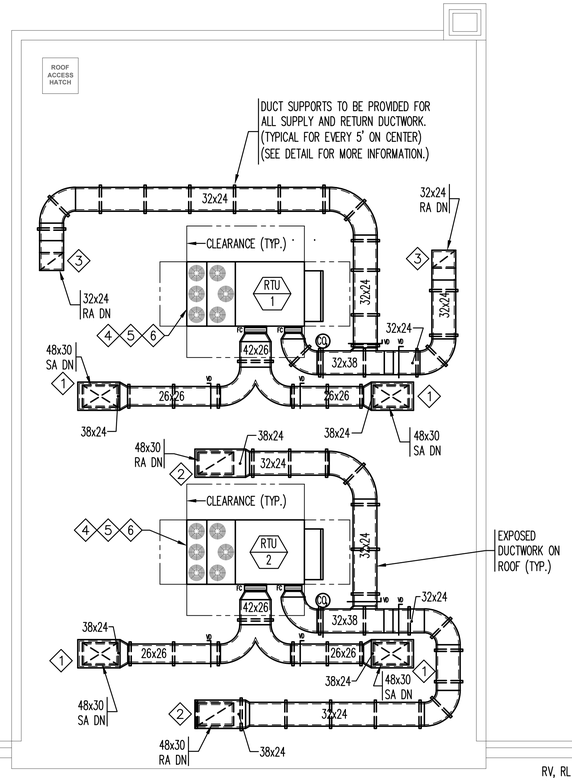

NEW WORK KEYNOTES:

1. 42x30 SA DOWN THROUGH THE ROOF. CONNECT TO SUPPLY REGISTER SR-1 AT AUDITORIUM CEILING.
2. 42x30 RA DUCT DOWN THROUGH THE ROOF. CONNECT TO RETURN REGISTER RR-1 AT AUDITORIUM CEILING.
3. 32x24 RA DUCT DOWN THROUGH ROOF. SEE FLOOR BELOW FOR CONTINUATION.
4. PROVIDE P TRAP FOR CONDENSATE DRAIN FOR RTU.
5. STEEL DUNNAGE TO SUPPORT THE NEW ROOFTOP UNITS.
6. SMOKE DETECTORS TO BE FURNISHED AS PART OF THE NEW ROOFTOP UNITS.
7. PROVIDE A FREE-STANDING ROOF GUARD SYSTEM THAT SHALL BE THE NON-PENETRATING STYLE AS MANUFACTURED BY EBERL IRON WORK. ROOF GUARDS SHALL BE 48 INCHES HIGH AND SHALL BE FABRICATED OF 1-1/4" STEEL TUBING. GUARDS SHALL EXTEND 30 INCHES BEYOND EACH END OF THE WALKWAY. SEE THE HVAC SPECIFICATION FOR MORE INFORMATION.
8. NEW 30"x30" BLOCK EPDM PEEL/STICK WALKWAY PADS. (TYP.)
9. NEW "ERECT-A-STEP" CROSSOVER STAIR OVER NEW DUCTWORK.
10. EXISTING ROOF ACCESS HATCH WITH EXISTING FREE-STANDING RAILS TO REMAIN.

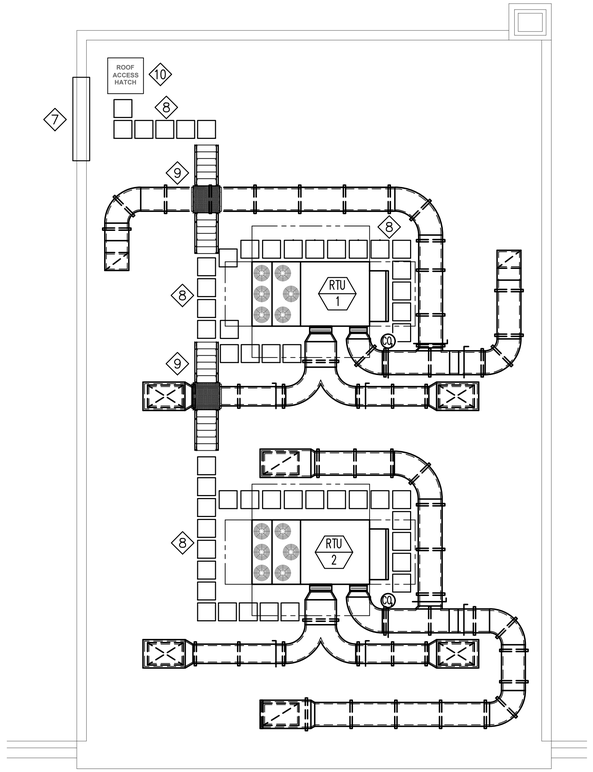

NEW WORK PART PLAN - SAFETY - ROOF

SCALE: 1/8" = 1'-0"

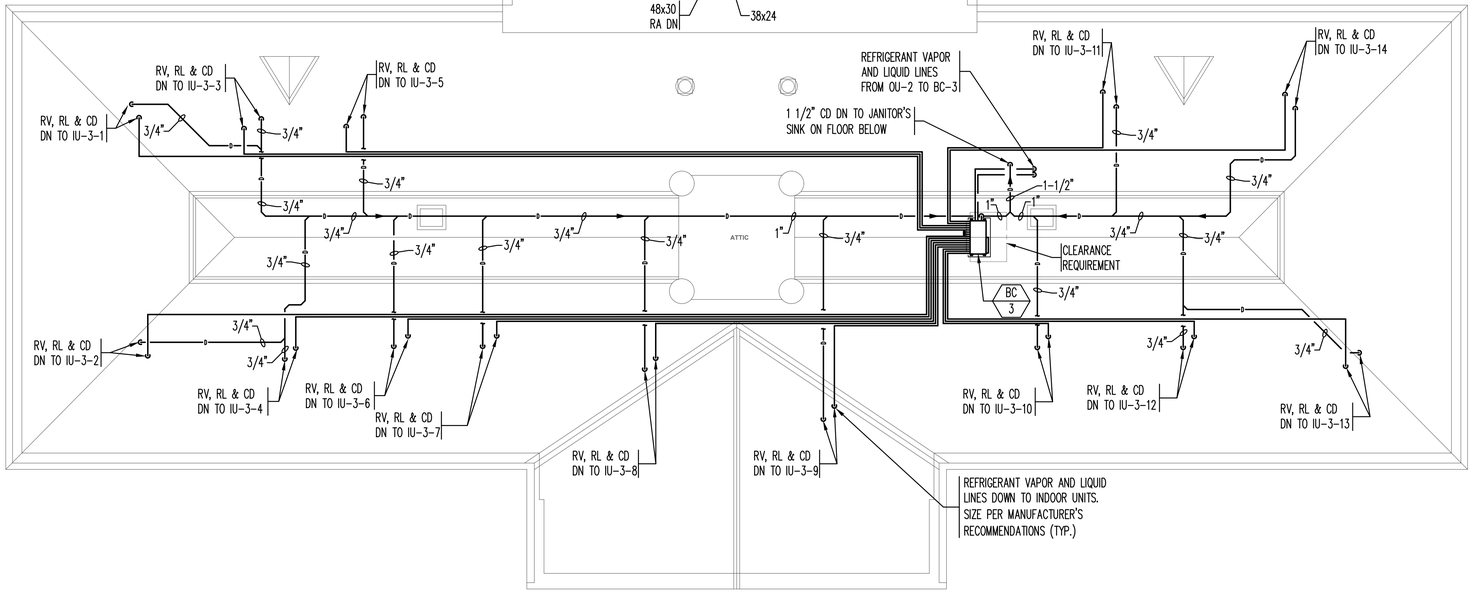

NEW WORK PLAN - HVAC - ATTIC/ROOF

SCALE: 1/8" = 1'-0"

REVISION DATES	TOWN OF WAREHAM TOWN HALL AIR CONDITIONING PROJECT	STAMP
	MECHANICAL - ATTIC/ROOF NEW WORK PLAN	
DATE: 07/21/2021 SCALE: AS SHOWN DRAWN BY: FV CHECKED BY: MHV PROJECT NO. 21013.00	c.a. crowley. ENGINEERING, INC. 645 County Street . Suite 6 Taunton, MA 02780 tel . (508) 884.5094 WWW.CROWLEYENG.COM fax . (508) 884.5099	DRAWING NUMBER M-4

ROOFTOP AIR CONDITIONING UNIT SCHEDULE

ITEM NO.	MODEL	SUPPLY FAN					COOLING SECTION						HEATING (LP GAS)		ELECTRICAL						EER	IEER/SEER	FOOTPRINT LxWxH (IN.)	REMARKS
		CFM	O.A. CFM	ESP	BHP	RPM	TOT.MBH	SEN.MBH	EDB	EWB	LDB	LWB	MBH IN	MBH OUT	COMP.RLA (#1/#2)	V	PH	HZ	MCA	MOCP				
RTU-1	48HCED28E3A5-6F2J0	10,000	2,230	1.15	7.60	1181	315.41	224.66	88.2	66.9	57.9	57.0	248.0/310.0	200.0/251.0	48.1/33.9	208	3	60	136.3	175	11.20	12.5	157.75x86.375x57.375	1.
RTU-2	48HCED28E3A5-6F2J0	10,000	2,230	1.15	7.60	1181	315.41	224.66	88.2	66.9	57.9	57.0	248.0/310.0	200.0/251.0	48.1/33.9	208	3	60	136.3	175	11.20	12.5	157.75x86.375x57.375	1.

BASED ON TRANE 1. PROVIDE WITH ECONOMIZER.

OUTDOOR AIR COOLED CONDENSING UNIT SCHEDULE

ITEM NO.	SERVING	MODEL	COOLING CAP. TOTAL MBH	HEATING CAP. MBH	IEER/EER	ELECTRICAL			MCA	MOCP	WEIGHT LBS	OPERATIONAL RANGE (DEGREES F)	REMARKS
						V	PH	HZ					
OU-1	ADMIN BLDG 1ST & 2ND FL	PURY-P168YNU-A-BS	168	188	25.8/11.0	208	3	60	61	100/90	774	COOLING 23 to 126 HEATING -4 to 60	R410A 1. 2.
OU-2	ADMIN BLDG 3RD FL	PURY-P144YNU-A-BS	144	160	28.7/12.2	208	3	60	52	80/70	682	COOLING 23 to 126 HEATING -4 to 60	R410A 2.
ACCU-1	ELEVATOR MACH. RM.	PUY-A18NKA7-BS	18.0	-	9.9 EER	208/230	1	60	11.0	28	110	-40 DB to 115 DB	R410A 2.

BASED ON MITSUBISHI. 1. TWO MODULES. EACH INDIVIDUAL MODULE REQUIRES A SEPARATE ELECTRICAL CONNECTION. PROVIDE TWINNING KIT MODEL #CMY-R200NCBK.
2. PROVIDE WITH SNOW/HAIL GUARD ACCESSORY.

INDOOR AIR CONDITIONING UNIT SCHEDULE

ITEM NO.	TYPE	MODEL	SUPPLY FAN CFM (LO-MED-HI)	COOLING MBH	HEATING MBH	ELECTRICAL					WEIGHT (LBS)	REMARKS
						V	PH	HZ	MCA	MOCP		
IU 1-1	CEILING CASSETTE	PLFY-P05NFMU-E	230-265-280	5.0	5.6	208/230	1	60	0.24	-	34.2	R410A 1.
IU 1-2	CEILING CASSETTE	PLFY-P12NFMU-E	245-280-335	12.0	13.5	208/230	1	60	0.29	-	36.6	R410A 1.
IU 1-3	CEILING CASSETTE	PLFY-P05NFMU-E	230-265-280	5.0	5.6	208/230	1	60	0.24	-	34.2	R410A 1.
IU 1-4	CEILING CASSETTE	PLFY-P08NFMU-E	230-280-315	8.0	9.0	208/230	1	60	0.28	-	34.2	R410A 1.
IU 1-5	WALL-MOUNTED	PKFY-P08NLMU-E	141-162-191-237	8.0	9.0	208/230	1	60	0.24	15	24.5	R410A 1.
IU 1-6	CEILING CASSETTE	PLFY-P08NFMU-E	230-280-315	8.0	9.0	208/230	1	60	0.28	-	34.2	R410A 1.
IU 1-7	CEILING CASSETTE	PLFY-P05NFMU-E	230-265-280	5.0	5.6	208/230	1	60	0.24	-	34.2	R410A 1.
IU 1-8	CEILING CASSETTE	PLFY-P08NFMU-E	230-280-315	8.0	9.0	208/230	1	60	0.28	-	34.2	R410A 1.
IU 1-9	CEILING CASSETTE	PLFY-P08NFMU-E	230-280-315	8.0	9.0	208/230	1	60	0.28	-	34.2	R410A 1.
IU 2-1	WALL-MOUNTED	PKFY-P08NLMU-E	141-162-191-237	8.0	9.0	208/230	1	60	0.24	15	24.5	R410A 1.
IU 2-2	WALL-MOUNTED	PKFY-P08NLMU-E	141-162-191-237	8.0	9.0	208/230	1	60	0.24	15	24.5	R410A 1.
IU 2-3	WALL-MOUNTED	PKFY-P12NLMU-E	152-191-244-297	12.0	13.5	208/230	1	60	0.24	15	24.5	R410A 1.
IU 2-4	WALL-MOUNTED	PKFY-P06NLMU-E	141-155-173-191	6.0	6.7	208/230	1	60	0.24	15	24.5	R410A 1.
IU 2-5	WALL-MOUNTED	PKFY-P06NLMU-E	141-155-173-191	6.0	6.7	208/230	1	60	0.24	15	24.5	R410A 1.
IU 2-6	WALL-MOUNTED	PKFY-P06NLMU-E	141-155-173-191	6.0	6.7	208/230	1	60	0.24	15	24.5	R410A 1.
IU 2-7	WALL-MOUNTED	PKFY-P12NLMU-E	152-191-244-297	12.0	13.5	208/230	1	60	0.24	15	24.5	R410A 1.
IU 2-8	WALL-MOUNTED	PKFY-P06NLMU-E	141-155-173-191	6.0	6.7	208/230	1	60	0.24	15	24.5	R410A 1.
IU 2-9	WALL-MOUNTED	PKFY-P06NLMU-E	141-155-173-191	6.0	6.7	208/230	1	60	0.24	15	24.5	R410A 1.
IU 2-10	WALL-MOUNTED	PKFY-P12NLMU-E	152-191-244-297	12.0	13.5	208/230	1	60	0.24	15	24.5	R410A 1.
IU 2-11	WALL-MOUNTED	PKFY-P06NLMU-E	141-155-173-191	6.0	6.7	208/230	1	60	0.24	15	24.5	R410A 1.
IU 2-12	WALL-MOUNTED	PKFY-P12NLMU-E	152-191-244-297	12.0	13.5	208/230	1	60	0.24	15	24.5	R410A 1.
IU 3-1	CEILING CASSETTE	PLFY-P15NFMU-E	265-315-390	15.0	17.0	208/230	1	60	0.35	-	36.6	R410A 1.
IU 3-2	CEILING CASSETTE	PLFY-P15NFMU-E	265-315-390	15.0	17.0	208/230	1	60	0.35	-	36.6	R410A 1.
IU 3-3	CEILING CASSETTE	PLFY-P08NFMU-E	230-280-315	8.0	9.0	208/230	1	60	0.28	-	34.2	R410A 1.
IU 3-4	CEILING CASSETTE	PLFY-P05NFMU-E	230-265-280	5.0	5.6	208/230	1	60	0.24	-	34.2	R410A 1.
IU 3-5	CEILING CASSETTE	PLFY-P05NFMU-E	230-265-280	5.0	5.6	208/230	1	60	0.24	-	34.2	R410A 1.
IU 3-6	CEILING CASSETTE	PLFY-P08NFMU-E	230-280-315	8.0	9.0	208/230	1	60	0.28	-	34.2	R410A 1.
IU 3-7	CEILING CASSETTE	PLFY-P08NFMU-E	230-280-315	8.0	9.0	208/230	1	60	0.28	-	34.2	R410A 1.
IU 3-8	CEILING CASSETTE	PLFY-P08NFMU-E	230-280-315	8.0	9.0	208/230	1	60	0.28	-	34.2	R410A 1.
IU 3-9	CEILING CASSETTE	PLFY-P08NFMU-E	230-280-315	8.0	9.0	208/230	1	60	0.28	-	34.2	R410A 1.
IU 3-10	CEILING CASSETTE	PLFY-P05NFMU-E	230-265-280	5.0	5.6	208/230	1	60	0.24	-	34.2	R410A 1.
IU 3-11	CEILING CASSETTE	PLFY-P08NFMU-E	230-280-315	8.0	9.0	208/230	1	60	0.28	-	34.2	R410A 1.
IU 3-12	CEILING CASSETTE	PLFY-P05NFMU-E	230-265-280	5.0	5.6	208/230	1	60	0.24	-	34.2	R410A 1.
IU 3-13	CEILING CASSETTE	PLFY-P18NFMU-E	315-390-460	18.0	20.0	208/230	1	60	0.5	-	36.6	R410A 1.
IU 3-14	CEILING CASSETTE	PLFY-P18NFMU-E	315-390-460	18.0	20.0	208/230	1	60	0.5	-	36.6	R410A 1.
AC-1	WALL-MOUNTED	PKA-A18HA7	320-370-425	18.0	-	208/230	1	60	1.0	-	33	R410A 1.

BASED ON MITSUBISHI 1. PROVIDE WITH MINI CONDENSATE PUMP MODEL MAXIBLUE X87-721 - 208V

BRANCH CIRCUIT (BC) BOX SCHEDULE

ITEM NO.	MODEL	NO. OF ZONES	CAPACITY MBH	ELECTRICAL			MCA	MOCP	REMARKS
				V	PH	HZ			
BC-1	CMB-P1016NU-KA1	16	167	208/230	1	60	1.57/1.82	15	R410A 1. 2. 3.
BC-2	CMB-P108NU-KB1	5	42	208/230	1	60	0.74/0.87	15	R410A 1. 2.
BC-3	CMB-P1016NU-KA1	14	134	208/230	1	60	1.57/1.82	15	R410A 1. 2.

BASED ON MITSUBISHI. 1. REFER TO FLOOR PLANS FOR ZONE ASSIGNMENTS.
2. PROVIDE AUXILIARY DRAIN PAN WITH SAFETY SWITCH AND AUDIO ALARM.
3. PROVIDE WITH CONDENSATE PUMP MODEL X87-721 (208V) AS MANUFACTURED BY BLUE DIAMOND.

RETURN REGISTER SCHEDULE

ITEM NO.	MODEL	TYPE	SIZE	VELOCITY (FPM)	NC	REMARKS
RR-1	350ZRL	SURFACE MTD.	48"x30"	500	25	-

BASED ON TITUS
NOTE: PROVIDE DUCT TRANSITIONS TO REGISTERS AS REQUIRED.

SUPPLY REGISTER SCHEDULE

ITEM NO.	MODEL	TYPE	SIZE	BLOW	NC	THROW	VELOCITY (FPM)	REMARKS
SR-1	271FL	SURFACE MTD.	48"x30"	45° ADJ.	23	27-40-58	500	-

BASED ON TITUS
NOTE: PROVIDE DUCT TRANSITIONS TO REGISTERS AS REQUIRED.

LEGEND

- ROUND AIR DUCT UP
- ROUND AIR DUCT DOWN
- SUPPLY AIR DUCT UP
- SUPPLY AIR DUCT DOWN
- RETURN/EXHAUST AIR DUCT UP
- RETURN/EXHAUST AIR DUCT DOWN
- SQUARE TO ROUND DUCT TRANSITION
- ROUND DUCT BRANCH
- FLEX DUCT AND DIFFUSER
- VOLUME DAMPER (VD)
- REMOTE VOLUME DAMPER (RVD)
- MOTORIZED DAMPER (M)
- DUCTWORK W/ 1" LINING
- THERMOSTAT-ELECTRIC (T)
- / UCD — UNDER CUT DOOR
- CO2 — CARBON DIOXIDE DETECTOR
- RTU — ROOFTOP UNIT
- IU — INDOOR DUCTLESS SPLIT UNIT
- OU — OUTDOOR AIR COOLED CONDENSING UNIT
- BC — BRANCH BOX CONTROLLER
- SR — SUPPLY REGISTER
- RR — RETURN REGISTER
- AC — INDOOR UNIT
- ACCU — AIR-COOLED CONDENSING UNIT
- RL — REFRIGERANT LIQUID
- RV — REFRIGERANT VAPOR
- D — CONDENSATE DRAIN
- PIPE UP
- PIPE DOWN
- PIPE TEE DROP

SA	SUPPLY AIR
RA	RETURN AIR
EA	EXHAUST AIR
OA	OUTDOOR AIR
HVAC	HEATING, VENTILATING & AIR CONDITIONING
EC	ELECTRICAL CONTRACTOR
GC	GENERAL CONTRACTOR
CD	CONDENSATE DRAIN
AFF	ABOVE FINISHED FLOOR
CLG	CEILING
NIC	NOT IN CONTRACT
TYP.	TYPICAL
RV	REFRIGERANT VAPOR
RL	REFRIGERANT LIQUID
FC	FLEXIBLE CONNECTION
FPM	FEET PER MINUTE

REVISION DATES

TOWN OF WAREHAM
TOWN HALL
AIR CONDITIONING PROJECT

MECHANICAL - LEGEND & SCHEDULES

STAMP

DATE: 07/21/2021
SCALE: AS SHOWN
DRAWN BY: FV
CHECKED BY: MHV
PROJECT NO. 21013.00

c.a. crowley. ENGINEERING, INC.
645 County Street . Suite 6
Taunton, MA 02780
tel . (508) 884.5094 WWW.CROWLEYENG.COM fax . (508) 884.5099

DRAWING NUMBER
M-5

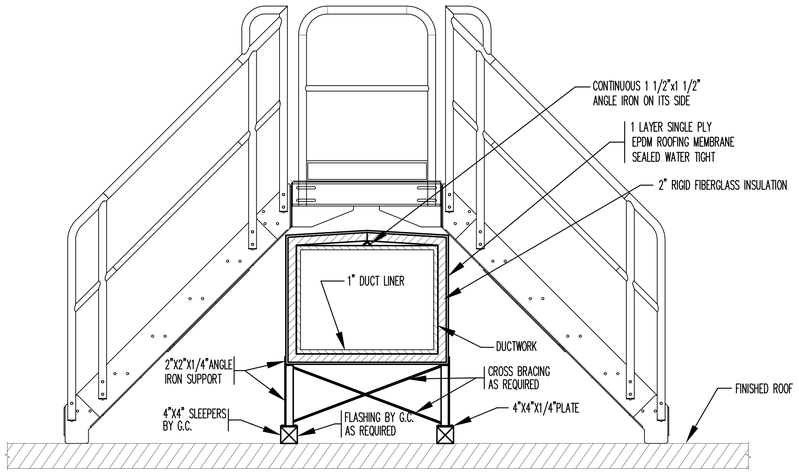

NOTE:
SPACE SUPPORTS A MAXIMUM OF 5'-0"ON CENTER (TYPICAL)

HORIZONTAL ROOF DUCT SUPPORT DETAIL WITH ERECT-A-STEP CROSSOVER BRIDGE

NO SCALE

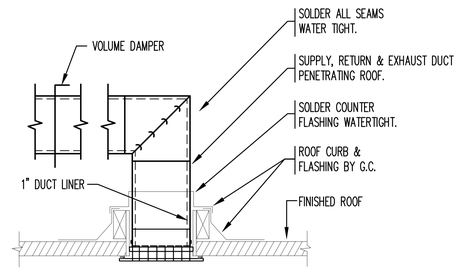

ROOF DUCT PENETRATION DETAIL WITH SUPPLY/RETURN GRILLE MOUNTED TO CEILING

NO SCALE

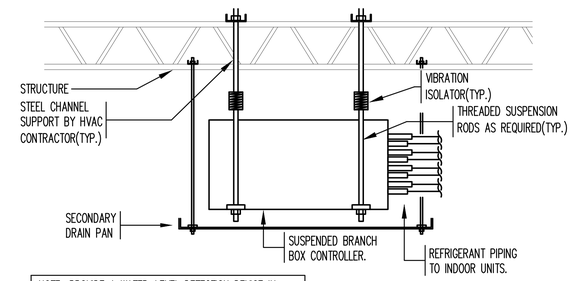

NOTE: PROVIDE A WATER-LEVEL DETECTION DEVICE IN THE SECONDARY DRAIN PAN THAT SHALL SHUT-OFF THE BRANCH BOX PRIOR TO OVERFLOW OF THE PAN.

BRANCH BOX CONTROLLER DETAIL

NO SCALE

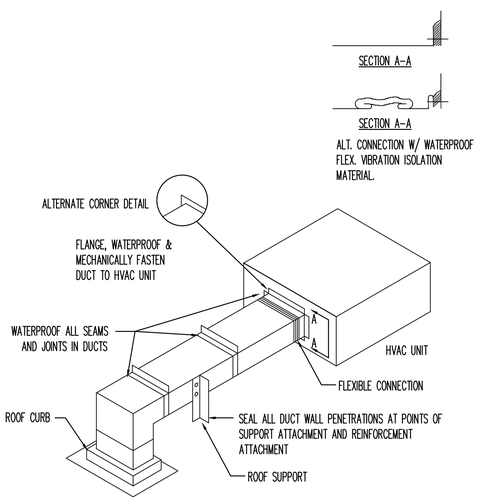

RECTANGULAR DUCT IS SHOWN BUT THE RECOMMENDATIONS APPLY TO ANY SHAPE AND ORIENTATION.

ROOFTOP DUCT INSTALLATION DETAIL

NO SCALE

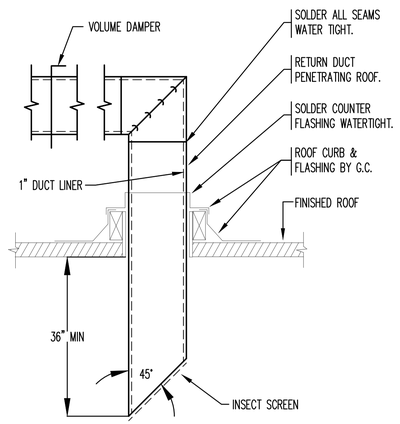

ROOF DUCT PENETRATION DETAIL - OPEN-ENDED RETURN DUCT

NO SCALE

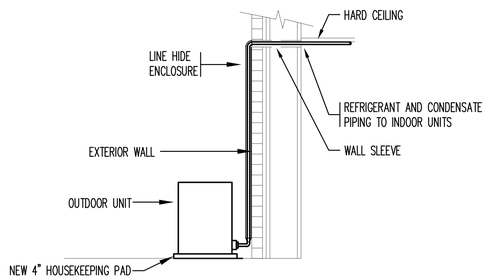

TYPICAL AT GRADE OUTDOOR UNIT DETAIL

NO SCALE

REVISION DATES	TOWN OF WAREHAM TOWN HALL AIR CONDITIONING PROJECT	STAMP
	MECHANICAL - DETAILS	
DATE: 07/21/2021 SCALE: AS SHOWN DRAWN BY: FV CHECKED BY: MHV PROJECT NO. 21013.00	c.a. crowley. ENGINEERING, INC. 645 County Street . Suite 6 Taunton, MA 02780 tel . (508) 884.5094 WWW.CROWLEYENG.COM fax . (508) 884.5099	DRAWING NUMBER M-6

BRANCH CIRCUIT AND FEEDER SCHEDULE

(X) INDICATES NOMINAL AMPACITY
(X) INDICATES QUANTITY OF PHASE AND/OR NEUTRAL CONDUCTORS

NOM. AMPACITY	QTY. OF COND.	PHASE AND/OR NEUTRAL CONDUCTORS AND GROUND	RACEWAY SIZE EMT	RACEWAY SIZE RGS
20	2	(2)#12 & 1#12 GND.	3/4"	3/4"
	3	(3)#12 & 1#12 GND.	3/4"	3/4"
	4	(4)#12 & 1#12 GND.	3/4"	3/4"
30	2	(2)#10 & 1#10 GND.	3/4"	3/4"
	3	(3)#10 & 1#10 GND.	3/4"	3/4"
	4	(4)#10 & 1#10 GND.	3/4"	3/4"
40	2	(2)#8 & 1#10 GND.	3/4"	3/4"
	3	(3)#8 & 1#10 GND.	3/4"	3/4"
	4	(4)#8 & 1#10 GND.	3/4"	3/4"
50	2	(2)#8 & 1#10 GND.	3/4"	3/4"
	3	(3)#8 & 1#10 GND.	3/4"	3/4"
	4	(4)#8 & 1#10 GND.	3/4"	3/4"
60	2	(2)#6 & 1#10 GND.	3/4"	3/4"
	3	(3)#6 & 1#10 GND.	3/4"	3/4"
	4	(4)#6 & 1#10 GND.	1"	1"
70	2	(2)#4 & 1#8 GND.	1"	1"
	3	(3)#4 & 1#8 GND.	1"	1"
	4	(4)#4 & 1#8 GND.	1 1/4"	1 1/4"
100	2	(2)#3 & 1#8 GND.	1"	1"
	3	(3)#3 & 1#8 GND.	1"	1"
	4	(4)#3 & 1#8 GND.	1 1/4"	1 1/4"
125	3	(3)#1 & 1#6 GND.	1 1/4"	1 1/4"
	4	(4)#1 & 1#6 GND.	1 1/2"	1 1/2"
150	3	(3)#1/0 & 1#6 GND.	1 1/2"	1 1/4"
	4	(4)#1/0 & 1#6 GND.	1 1/2"	1 1/2"
175	3	(3)#2/0 & 1#6 GND.	1 1/2"	1 1/2"
	4	(4)#2/0 & 1#6 GND.	2"	2"
200	3	(3)#3/0 & 1#6 GND.	2"	2"
	4	(4)#3/0 & 1#6 GND.	2"	2"
225	3	(3)#4/0 & 1#4 GND.	2"	2"
	4	(4)#4/0 & 1#4 GND.	2 1/2"	2 1/2"
250	3	(3)-250 KCMIL & 1#4 GND.	2"	2"
	4	(4)-250 KCMIL & 1#4 GND.	2 1/2"	2 1/2"
300	3	(3)-350 KCMIL & 1#4 GND.	2 1/2"	2 1/2"
	4	(4)-350 KCMIL & 1#4 GND.	2 1/2"	3"
350	3	(3)-500 KCMIL & 1#3 GND.	2 1/2"	3"
	4	(4)-500 KCMIL & 1#3 GND.	3"	3"
400	3	(3)-500 KCMIL & 1#3 GND.	2 1/2"	3"
	4	(4)-500 KCMIL & 1#3 GND.	3"	3"
500	3	(6)-250 KCMIL & 2#1/0 GND.	(2)2 1/2"	(2)2 1/2"
	4	(8)-250 KCMIL & 2#1/0 GND.	(2)2 1/2"	(2)2 1/2"
600	3	(6)-350 KCMIL & 2#2/0 GND.	(2)2 1/2"	(2)2 1/2"
	4	(8)-350 KCMIL & 2#2/0 GND.	(2)2 1/2"	(2) 3"
800	3	(6)-500 KCMIL & 2#2/0 GND.	(2) 3"	(2) 3"
	4	(8)-500 KCMIL & 2#2/0 GND.	(2) 3"	(2) 3 1/2"
1000	3	(9)-400 KCMIL & 3#3/0 GND.	(3)2 1/2"	(3) 3"
	4	(12)-400 KCMIL & 3#3/0 GND.	(3) 3"	(3) 3"
1200	3	(9)-600 KCMIL & 3#250 GND.	(3) 3"	(3) 3"
	4	(12)-600 KCMIL & 3#250 GND.	(3)3 1/2"	(3)3 1/2"
1600	3	(12)-600 KCMIL & 4#300 GND.	(4) 3"	(4) 3 1/2"
	4	(16)-600 KCMIL & 4#300 GND.	(4)3 1/2"	(4)3 1/2"

NOTES –
1. RACEWAY SIZE BASED ON EMT/RGS TYPE THWN COPPER CONDUCTORS. ADJUST AS REQUIRED FOR OTHER RACEWAY OR CONDUCTOR TYPES.
2. BASED ON 75°C TERMINATIONS. ADJUST FOR OTHER TERMINATION TEMPERATURE LIMITATIONS AS REQUIRED.

PANELBOARD SCHEDULE

PANEL NO. HP

208Y/120 VOLTS 3 PH W 4 MAIN CB 400 BUS 400 MIN. AIC 22K SYMM.

CKT NO.	TRIP AMPS	DESCRIPTION OF LOAD		DESCRIPTION OF LOAD	TRIP AMPS	CKT NO.
1	80/3	OU-1		OU-2	100/3	2
3	.	.		.	.	4
5	.	.		.	.	6
7	175/3	RTU-1		RTU-2	175/3	8
9	.	.		.	.	10
11	.	.		.	.	12
13	20/2	FIRST FLOOR IUs AND BC-1		FIRST FLOOR IUs AND BC-2	20/2	14
15	.	.		.	.	16
17	20/1	EQUIPMENT RECEPTACLE		SPARE	20/1	18
19	20/2	AC-1/ACCU-1		SPD	30/3	20
21	.	.		.	.	22
23	20/1	SPARE		.	.	24

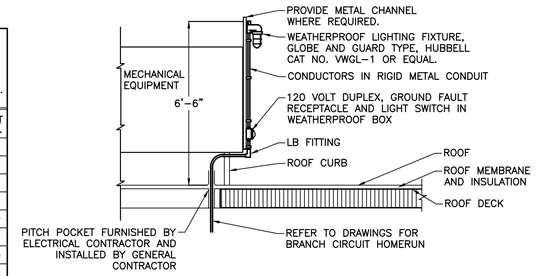

ROOF TOP MECHANICAL EQUIPMENT LIGHTING AND RECEPTACLE DETAIL

N.T.S.

ABBREVIATIONS

3R	NEMA 3R ENCLOSURE
A	AMPERE(S)
AF	AMPERE FRAME
AHJ	AUTHORITY HAVING JURISDICTION
AIC	AMPERE INTERRUPTING CAPACITY
AT	AMPERE TRIP
AWG	AMERICAN WIRE GAUGE
BC	BRANCH CIRCUIT BOX
C	CONDUIT, CELSIUS
CB	CIRCUIT BREAKER
CKT	CIRCUIT
CU	COPPER
EMT	ELECTRICAL METALLIC TUBING
ETR	EXISTING TO REMAIN
FA	FIRE ALARM
FACP	FIRE ALARM CONTROL PANEL
G,GND	GROUND
GC	GENERAL CONTRACTOR
GF	GROUND FAULT CIRCUIT INTERRUPTING
HVAC	HEATING, VENTILATING AND AIR CONDITIONING
IU	INDOOR AIR CONDITIONING UNIT
KCMIL	THOUSAND CIRCULAR MIL(S)
LED	LIGHT EMITTING DIODE
LFMC	LIQUID-TIGHT FLEXIBLE METAL CONDUIT
MAX	MAXIMUM
MDP	MAIN DISTRIBUTION PANELBOARD
MIN	MINIMUM
NEMA	NATIONAL ELECTRICAL MANUFACTURERS ASSOCIATION
OL	OVERLOAD
OU	OUTDOOR AIR COOLED CONDENSING UNIT
P	POLE(S)
PH	PHASE(S)
QTY	QUANTITY
RDP	REGISTERED DESIGN PROFESSIONAL
RGS	RIGID GALVANIZED STEEL
RTS	REMOTE TEST SWITCH
RTU	ROOFTOP AIR CONDITIONING UNIT
SYMM	SYMMETRICAL
TBR	TO BE REMOVED
TV	TELEVISION
TYP	TYPICAL
UNO	UNLESS NOTED OTHERWISE
V	VOLT(S)
VA	VOLTAMPERE(S)
W	WIRE
WFD	WAREHAM FIRE DEPARTMENT
WP	WEATHERPROOF

LEGEND

- NEMA 5-20R DUPLEX RECEPTACLE
- PANELBOARD, AS SCHEDULED
- ATS — AUTOMATIC TRANSFER SWITCH
- S_M — MANUAL MOTOR STARTER, W/OL PROTECTION 20 AMP, 1 POLE UNO
- FUSED DISCONNECT, 30 AMP, 3 POLE, UNO
- CB — ENCLOSED CIRCUIT BREAKER, 30 AMP, 3 POLE UNO
- P1-1,3 — HOMERUN TO PANEL 'P1', CIRCUITS 1 AND 3. CIRCUIT WIRING AS BELOW.
- CIRCUIT WIRING. NO HASHES INDICATES (2)#12AWG, (1)#12AWG GND, (1)3/4"C. QTY. OF HASHES INDICATES QTY. OF WIRES IF MORE THAN 2 PLUS GND.
- (X)(X) — FEEDER TAG, REFER TO BRANCH CIRCUIT AND FEEDER SCHEDULE
- (X)(X) — EQUIPMENT TAG
- (2) — SMOKE DETECTOR, PHOTO TYPE UNO; 'D' DENOTES DUCT MOUNTED TYPE;
- FACP — FIRE ALARM CONTROL PANEL
- RTS — REMOTE TEST STATION
- LED — REMOTE ALARM INDICATOR
- LINEWEIGHT DENOTES EXISTING
- LINEWEIGHT DENOTES PROPOSED

GENERAL NOTES

1. ALL WORK SHALL COMPLY COMPLETELY WITH THE MASSACHUSETTS ELECTRICAL CODE (MEC) AND ALL LOCAL ORDINANCES AND REQUIREMENTS.
2. THE DRAWINGS ARE GENERALLY DIAGRAMMATIC. PROVIDE ALL MATERIAL, LABOR AND EQUIPMENT FOR INSTALLATION OF COMPLETE AND OPERATIONAL SYSTEMS.
3. APPLY FOR, PAY FOR AND OBTAIN ALL REQUIRED PERMITS FOR THE WORK SHOWN. REQUEST, SCHEDULE AND ATTEND ALL REQUIRED INSPECTIONS BY THE AUTHORITY(IES) HAVING JURISDICTION (AHJ) AND OBTAIN ALL APPROVALS.
4. REFER TO DRAWINGS OF ALL TRADES AND ADJUST WORK AND ROUGH-IN AS REQUIRED, BASED ON EQUIPMENT APPROVED AND INSTALLED, AND FIELD CONDITIONS.
5. ALL WORK SHALL BE GUARANTEED AGAINST DEFECTS IN MATERIAL AND WORKMANSHIP FOR MINIMUM ONE (1) YEAR FOLLOWING ACCEPTANCE OF THE WORK BY THE OWNER.
6. ALL MATERIAL INCORPORATED IN THE WORK SHALL BE LISTED FOR THE USE, OR ACCEPTED BY THE AHJ(s).
7. BIDDERS ARE ADVISED TO VISIT THE SITE PRIOR TO SUBMITTING A BID TO NOTE CONDITIONS UNDER WHICH NEW WORK MUST BE INSTALLED.
8. WORK UNDER CONSTRUCTION CONTROL MUST BE INSTALLED AS SHOWN ON THE APPROVED CONSTRUCTION DOCUMENTS. ANY CHANGES MUST BE APPROVED BY THE REGISTERED DESIGN PROFESSIONAL (RDP) IN ADVANCE. COSTS FOR CHANGES TO DOCUMENTS SHALL BE BORNE BY THE PARTY REQUIRING THE CHANGE. FAILURE TO INSTALL THE WORK AS SHOWN WILL PREVENT ISSUANCE OF A FINAL CONSTRUCTION CONTROL DOCUMENT.

NANGLE ENGINEERING INCORPORATED
32 Prince Street
Danvers, MA 01923
Tel. (978) 777-7650

REVISION DATES

TOWN OF WAREHAM
TOWN HALL
AIR CONDITIONING PROJECT

ELECTRICAL - LEGEND, SCHEDULES, AND DETAILS

STAMP

DATE:	07/21/2021
SCALE:	NONE
DRAWN BY:	CWN
CHECKED BY:	GPN
PROJECT NO.	21013.00

c.a. crowley. ENGINEERING, INC.
645 County Street . Suite 6
Taunton, MA 02780
tel . (508) 884.5094 WWW.CROWLEYENG.COM fax . (508) 884.5099

DRAWING NUMBER

E-1

N:\2021 Project Folders\21009 Wareham Town Hall\Drawings\21009Eb.dwg

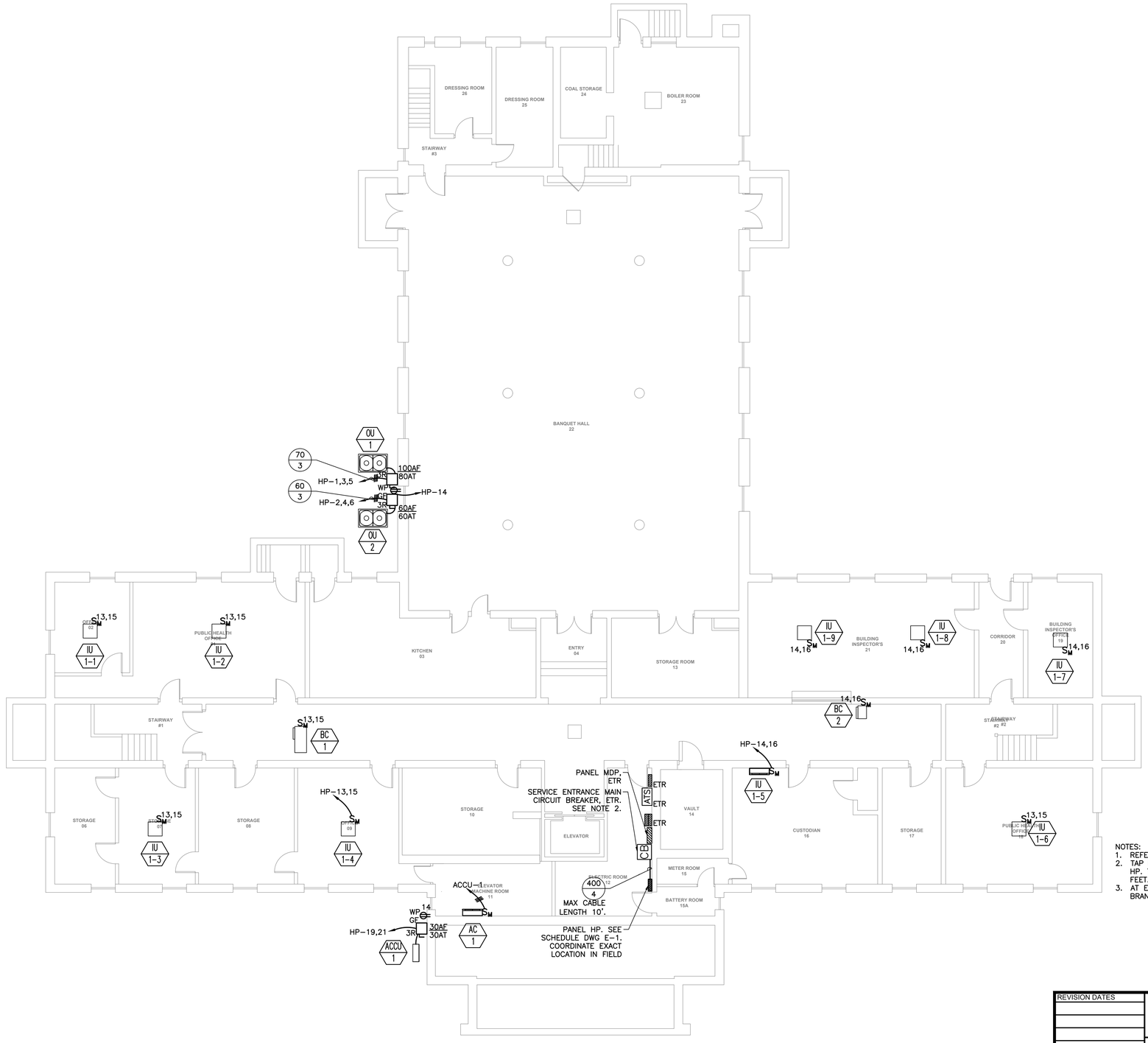

NEW WORK PLAN - FIRST FLOOR

SCALE: 1/8" = 1'-0"

0 4 8 16

SCALE: 1/8"=1'-0"

NOTES:
1. REFER TO DRAWING E-1 FOR LEGEND AND GENERAL NOTES.
2. TAP LOAD SIDE OF MAIN CIRCUIT BREAKER TO FEED NEW PANEL HP. TAP CONDUCTORS SHALL BE NO LONGER THAN 10 CABLE FEET.
3. AT EACH IU AND AC, CIRCUIT CIRC PUMP PROVIDED BY GC TO BRANCH CIRCUIT FEEDING IU OR AC.

NANGLE ENGINEERING INCORPORATED
32 Prince Street
Danvers, MA 01923
Tel. (978) 777-7650

REVISION DATES	TOWN OF WAREHAM TOWN HALL AIR CONDITIONING PROJECT	STAMP
	ELECTRICAL - FIRST FLOOR NEW WORK PLAN	
DATE: 07/21/2021	c.a. crowley. ENGINEERING, INC.	DRAWING NUMBER
SCALE: AS SHOWN	645 County Street . Suite 6 Taunton, MA 02780	E-2
DRAWN BY: CWN		
CHECKED BY: GPN		
PROJECT NO. 21013.00	tel . (508) 884.5094 WWW.CROWLEYENG.COM fax . (508) 884.5099	

N:\2021 Project Folders\21009 Wareham Town Hall\Drawings\21009Eb.dwg

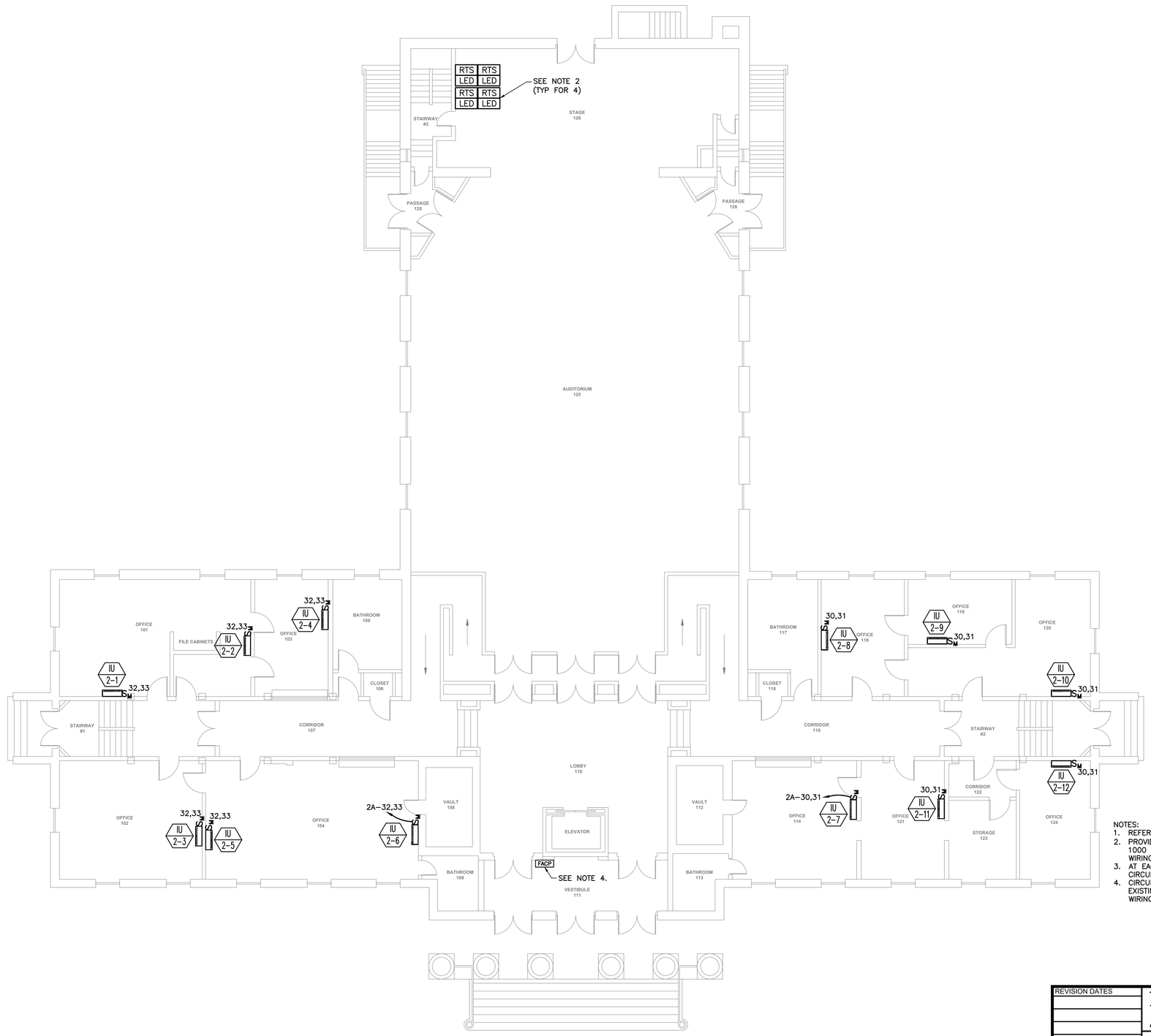

NOTES:
1. REFER TO DRAWING E–1 FOR LEGEND AND GENERAL NOTES.
2. PROVIDE RTS/LEDs COMPATIBLE WITH EXISTING MIRCOM SERIES 1000 FACP AND LOCATE AS DIRECTED BY WFD. PROVIDE ALL WIRING, PROGRAMMING AND TESTED AS REQUIRED.
3. AT EACH IU, CIRCUIT CIRC PUMP PROVIDED BY GC TO BRANCH CIRCUIT FEEDING IU.
4. CIRCUIT NEW DUCT SMOKE DETECTORS TO SPARE IDC IN EXISTING MIRCOM SERIES 1000 FACP. PROVIDE ALL REQUIRED WIRING, DEVICES, RELAYS, PROGRAMMING AND TESTING REQUIRED.

NEW WORK PLAN - SECOND FLOOR

SCALE: 1/8" = 1'-0"

0 4 8 16

SCALE: 1/8"=1'–0"

NANGLE ENGINEERING INCORPORATED
32 Prince Street
Danvers, MA 01923
Tel. (978) 777–7650

REVISION DATES	TOWN OF WAREHAM TOWN HALL AIR CONDITIONING PROJECT	STAMP
	ELECTRICAL - SECOND FLOOR NEW WORK PLAN	
DATE: 07/21/2021 SCALE: AS SHOWN DRAWN BY: CWN CHECKED BY: GPN PROJECT NO. 21013.00	c.a. crowley. ENGINEERING, INC. 645 County Street . Suite 6 Taunton, MA 02780 tel . (508) 884.5094 WWW.CROWLEYENG.COM fax . (508) 884.5099	DRAWING NUMBER E-3

N:\2021 Project Folders\21009 Wareham Town Hall\Drawings\21009Eb.dwg

NOTES:
1. REFER TO DRAWING E–1 FOR LEGEND AND GENERAL NOTES.
2. AT PANEL 2A, PROVIDE (5)20A/2P AND (1)20A/1P CIRCUIT BREAKERS IN SPACE TO SERVE NEW FIRST AND SECOND FLOOR IUs AND EQUIPMENT RECEPTACLES AS INDICATED.
3. AT EACH IU, CIRCUIT CIRC PUMP PROVIDED BY GC TO BRANCH CIRCUIT FEEDING IU.

NEW WORK PLAN - THIRD FLOOR

SCALE: 1/8" = 1'-0"

0 4 8 16

SCALE: 1/8"=1'–0"

NANGLE ENGINEERING INCORPORATED
32 Prince Street
Danvers, MA 01923
Tel. (978) 777–7650

REVISION DATES	TOWN OF WAREHAM TOWN HALL AIR CONDITIONING PROJECT	STAMP
	ELECTRICAL - THIRD FLOOR NEW WORK PLAN	
DATE: 07/21/2021 SCALE: AS SHOWN DRAWN BY: CWN CHECKED BY: GPN PROJECT NO. 21013.00	c.a. crowley. ENGINEERING, INC. 645 County Street . Suite 6 Taunton, MA 02780 tel . (508) 884.5094 WWW.CROWLEYENG.COM fax . (508) 884.5099	DRAWING NUMBER E-4

N:\2021 Project Folders\21009 Wareham Town Hall\Drawings\21009Eb.dwg

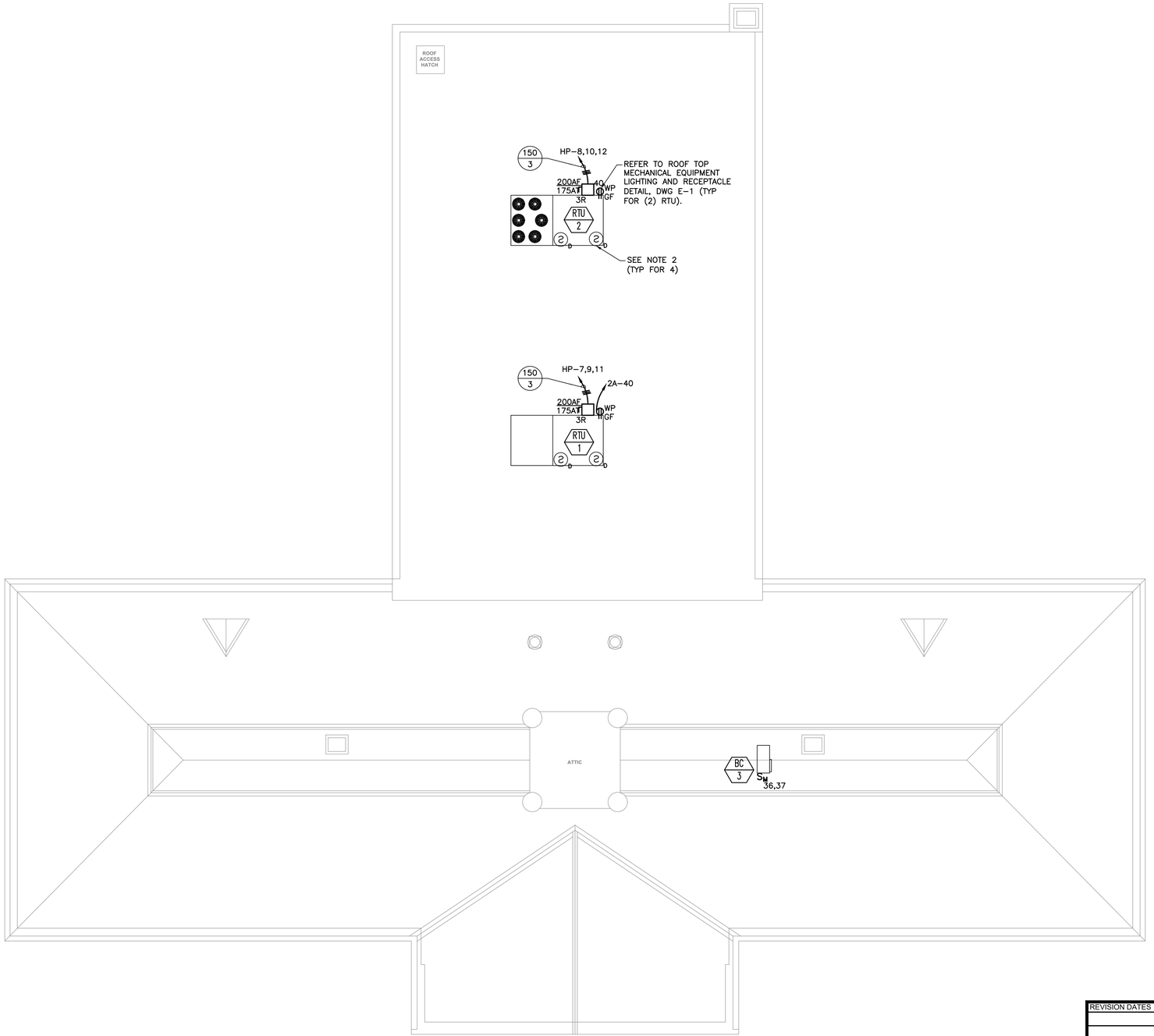

NOTES:
1. REFER TO DRAWING E-1 FOR LEGEND AND GENERAL NOTES.
2. 4-WIRE DUCT SMOKE DETECTORS SHALL BE FURNISHED WITH RTU. CONFIRM COMPATIBILITY AND CONNECT DUCT SMOKE DETECTORS TO EXISTING MIRCOM SERIES 1000 FACP. PROVIDE RTS/LEDs AND LOCATE AS DIRECTED BY WFD. PROVIDE ALL WIRING, DEVICES, PROGRAMMING AND TESTING AS REQUIRED TO SHUT DOWN ASSOCIATED RTU UPON DUCT SMOKE ALARM.

NEW WORK PLAN - ATTIC/ROOF

SCALE: 1/8" = 1'-0"

0 4 8 16

SCALE: 1/8"=1'-0"

NANGLE ENGINEERING INCORPORATED
32 Prince Street
Danvers, MA 01923
Tel. (978) 777-7650

REVISION DATES	TOWN OF WAREHAM TOWN HALL AIR CONDITIONING PROJECT	STAMP
	ELECTRICAL - ATTIC/ROOF NEW WORK PLAN	
DATE: 07/21/2021 SCALE: AS SHOWN DRAWN BY: CWN CHECKED BY: GPN PROJECT NO. 21013.00	c.a. crowley. ENGINEERING, INC. 645 County Street . Suite 6 Taunton, MA 02780 tel . (508) 884.5094 WWW.CROWLEYENG.COM fax . (508) 884.5099	DRAWING NUMBER E-5

N:\2021 Project Folders\21009 Wareham Town Hall\Drawings\21009Eb.dwg